I³N Innovative Integrated Instrumentation for Nanoscience

polifab POLITECNICO DI MILANO

POLITECNICO MILANO 1863

High Resolution Electronic Measurements in Nano-Bio Science

High-resolution measurements

Sub-ppm measurements using lock-in amplifiers

Giorgio Ferrari

Milano, June, 2023

OUTLOOK of the LESSON

- Introduction to the problem
- Noise sources limiting high-resolution measurements:
  - Additive noise sources
  - Multiplicative noise sources
- Solutions:
  - Ratiometric technique
    - ELIA: Enhanced Lock-In Amplifier
  - Differential approach

Thursday lesson

Interface electronics

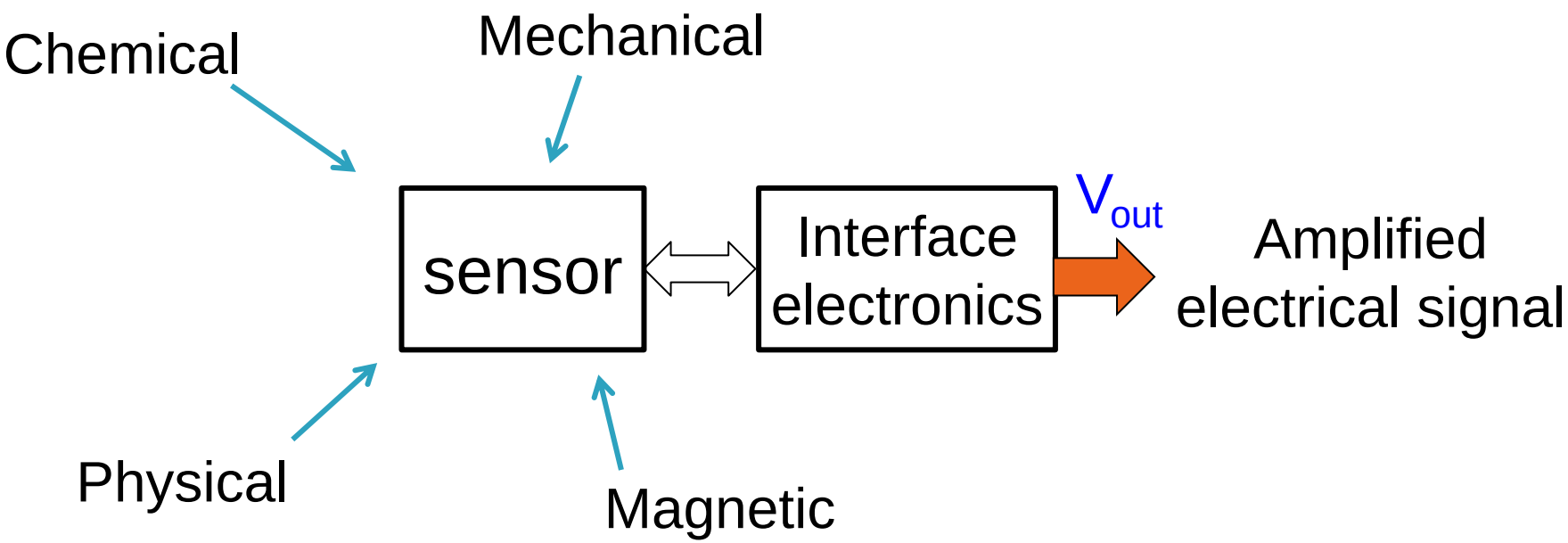

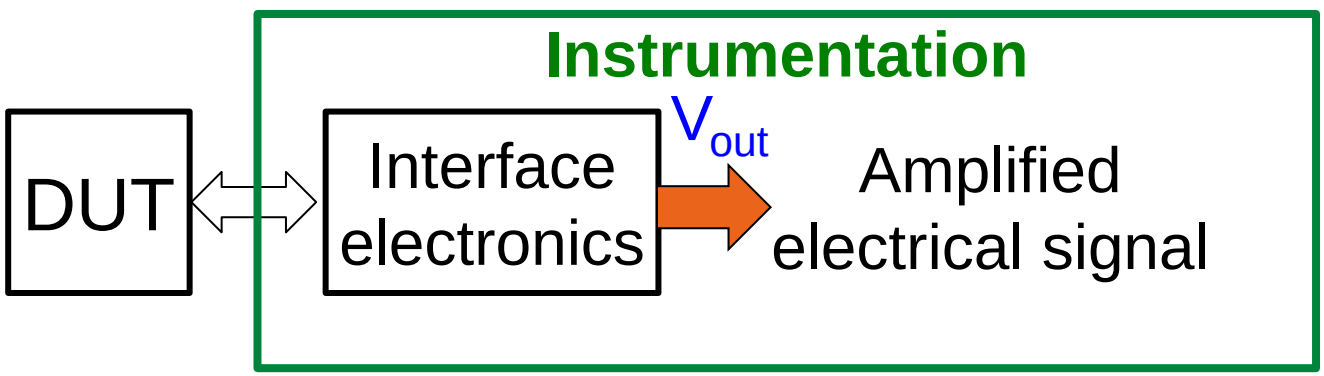

$V_{out} = f(S)$ S = quantity to be measured

Definitions (assuming a linear response for simplicity)

Sensor + electronics response:

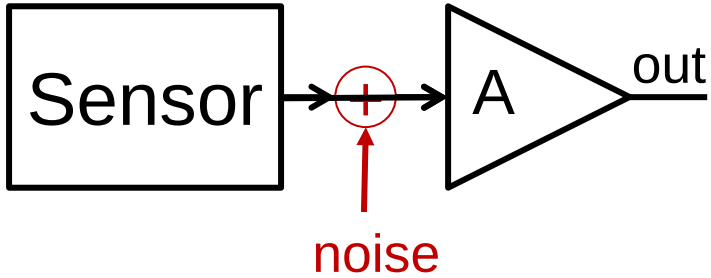

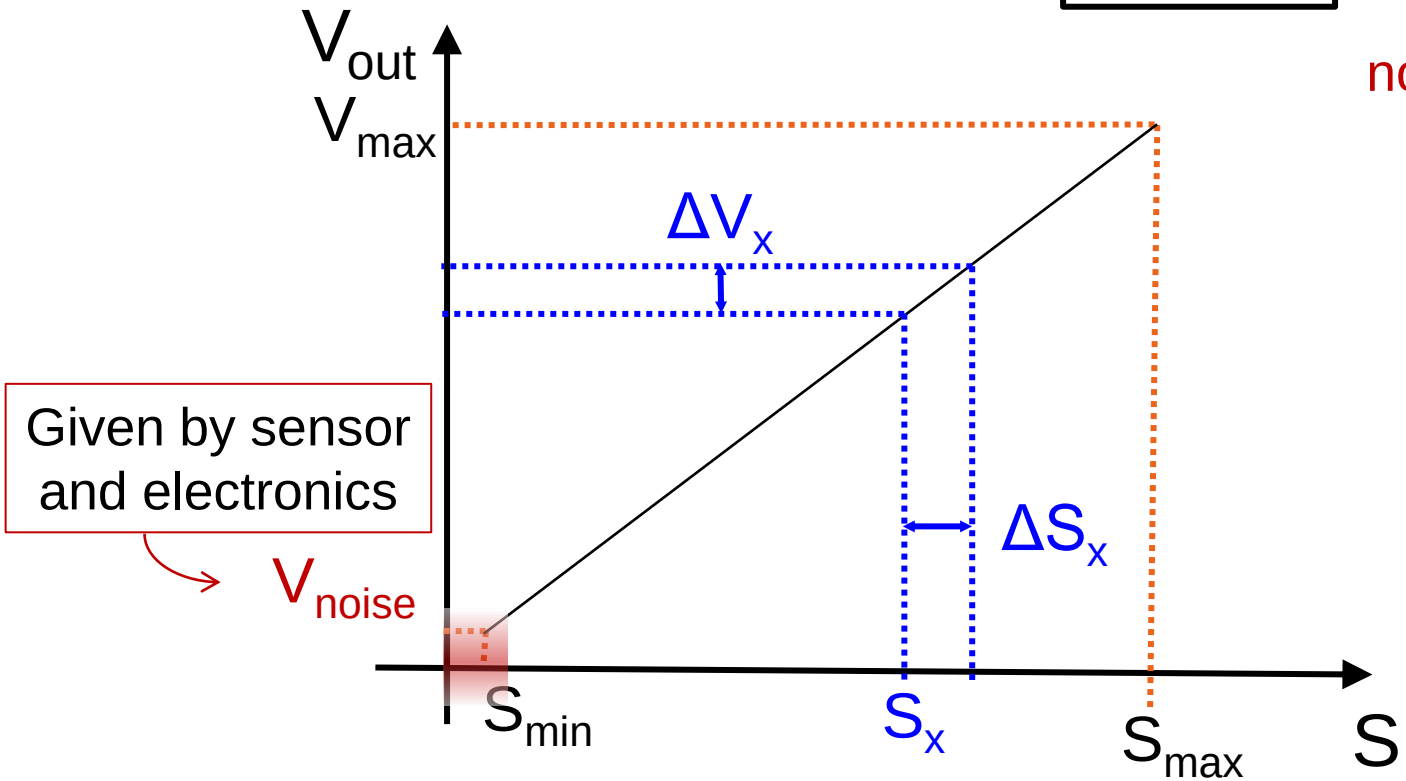

Minimum detectable signal (limit of detection): S_{min}

Resolution: minimum detectable variation ΔS_x

Relative resolution: $\Delta S_x/S_x$ (ppm – parts per million)

A. D'Amico and C. Di Natale, "A contribution on some basic definitions of sensors properties," *IEEE Sens. J.*, vol. 1, no. 3, pp. 183–190, 2001.

Why resolution is important

Marco Sampietro's lesson on impedance:

Impedance at the Nanoscale

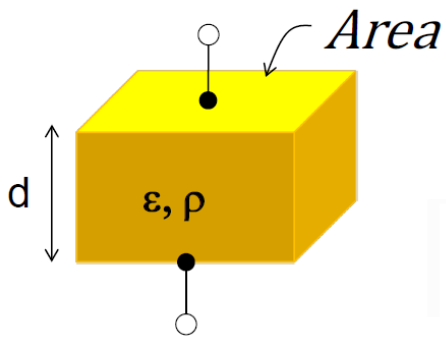

Area = 100nm x 100nm
d = 10nm
$\varepsilon_r = 4$

$$C = \epsilon \frac{Area}{d} \propto size$$

35aF!

Stray capacitances ~pF (in parallel)

aF variations on pF baseline (see Fumagalli's lessons)

Francesco Zanetto's lesson on trasparent detection of light:

CLIPP sensor:

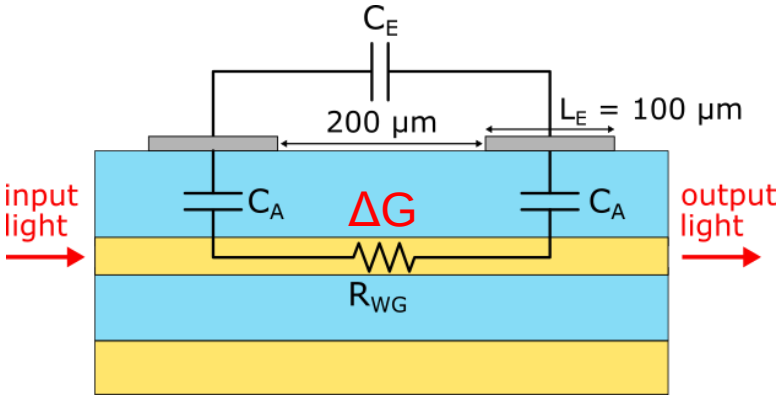

pS variations on μS baseline

The problem of the lesson

Sensor + electronics response:

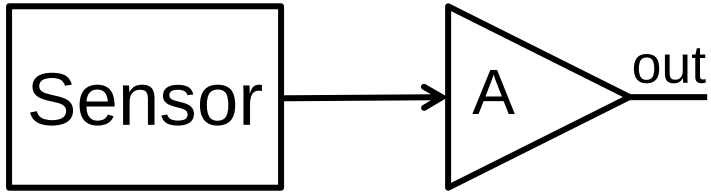

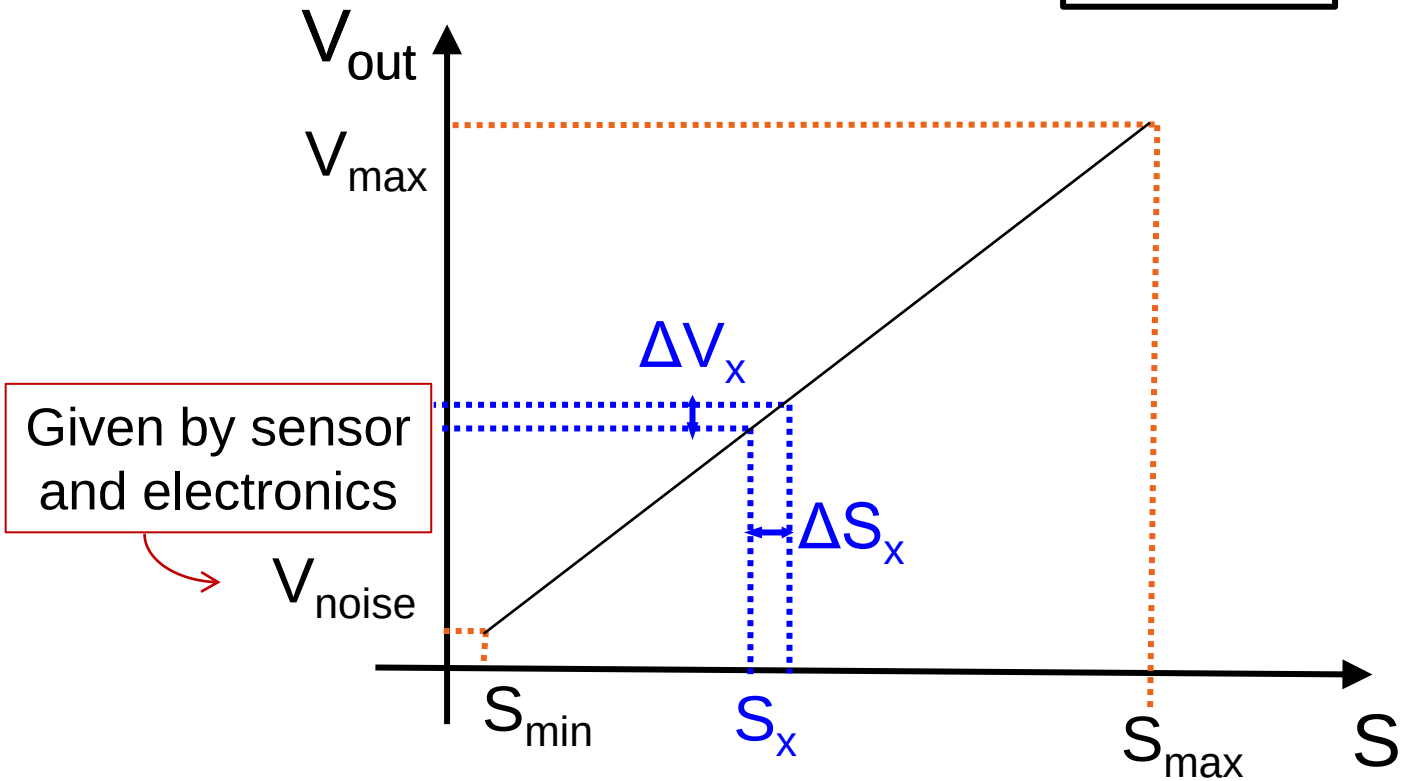

Resolution: minimum detectable variation ΔS_x

What are the limiting factors of the resolution?

Input-referred noise of the electronics

Sensor + electronics response:

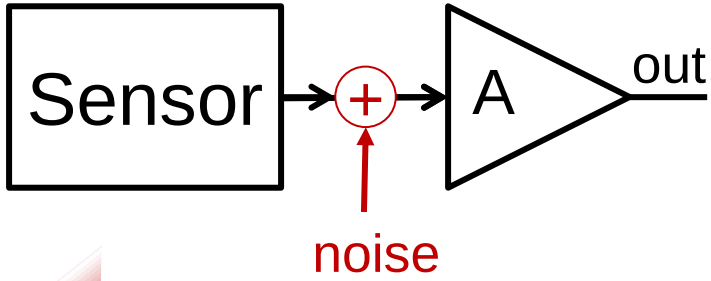

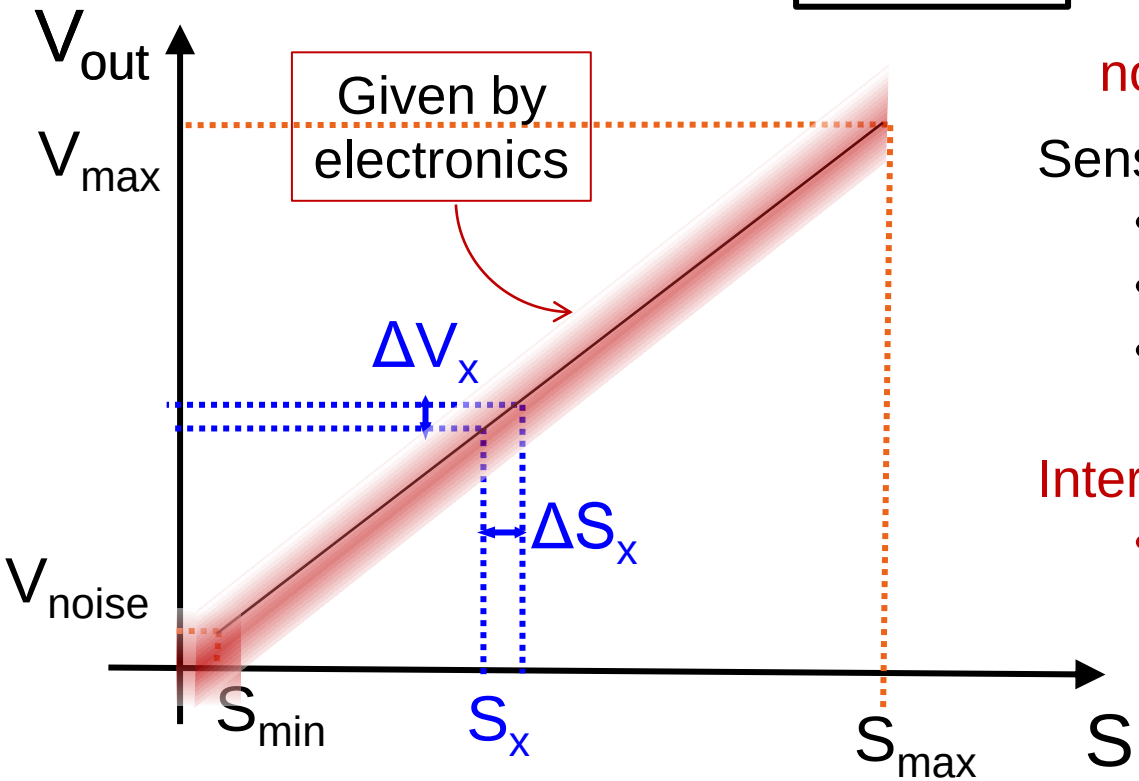

Sensor:

- Thermal noise
- Shot noise: 2qI
- 1/f noise: usually prop. to I_{bias}^2

Interface electronics:

- Equivalent input noise (voltage, current)

- Usually independent from S for a fixed gain
- Set the minimum detectable signal and the *best* resolution

Capacitive sensor: a case study

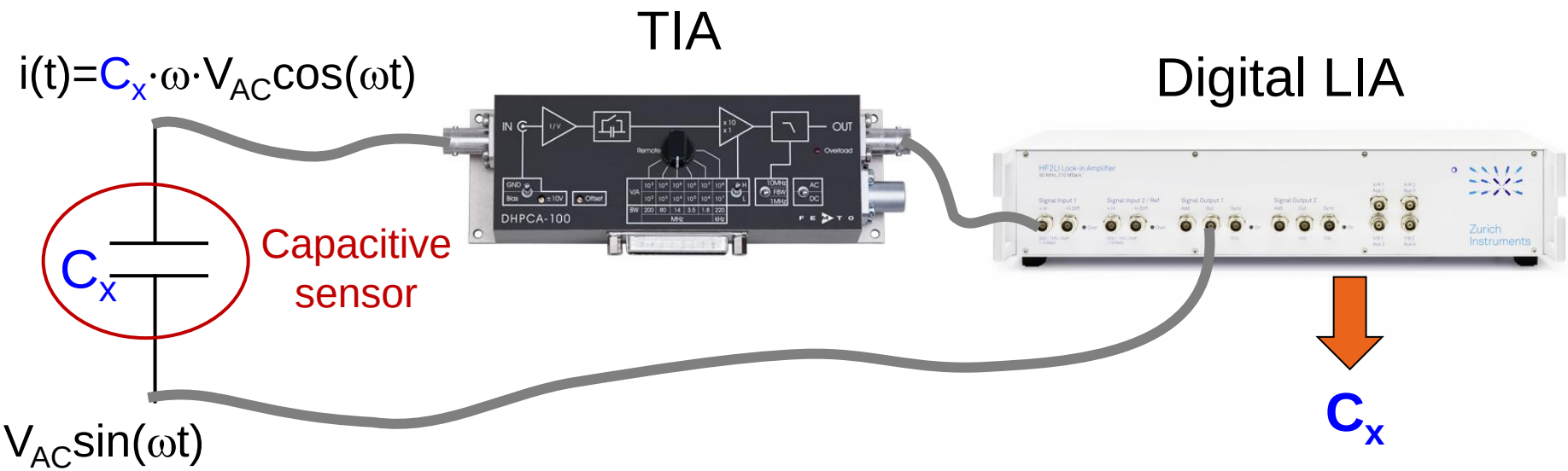

Example:

We choose: LIA: f=10kHz, BW_{LIA}= 1Hz

Then: TIA: BW_{TIA} > 100kHz → Gain = 10^6 V/A,

$$\overline{i_{eq}^2} \cong \left(140\, fA/\sqrt{Hz}\right)^2$$ (cable length < 1m)

If C_x = 100 fF, what is the resolution ΔC_x?

$$2\pi f \Delta C_x \cdot V_{AC} > \sqrt{2\overline{i_{eq}^2} BW_{LIA}} \quad \Rightarrow \quad \Delta C_{x,min} \approx {}^{3aF}/_{V_{AC}}$$

Capacitive sensor: experimental results

C_x = 100 fF, f=10kHz, G=10^6 V/A, BW_{LIA}=1Hz

$$\mathrm{LIA_{out}} = C_x \cdot \omega V_{AC}$$

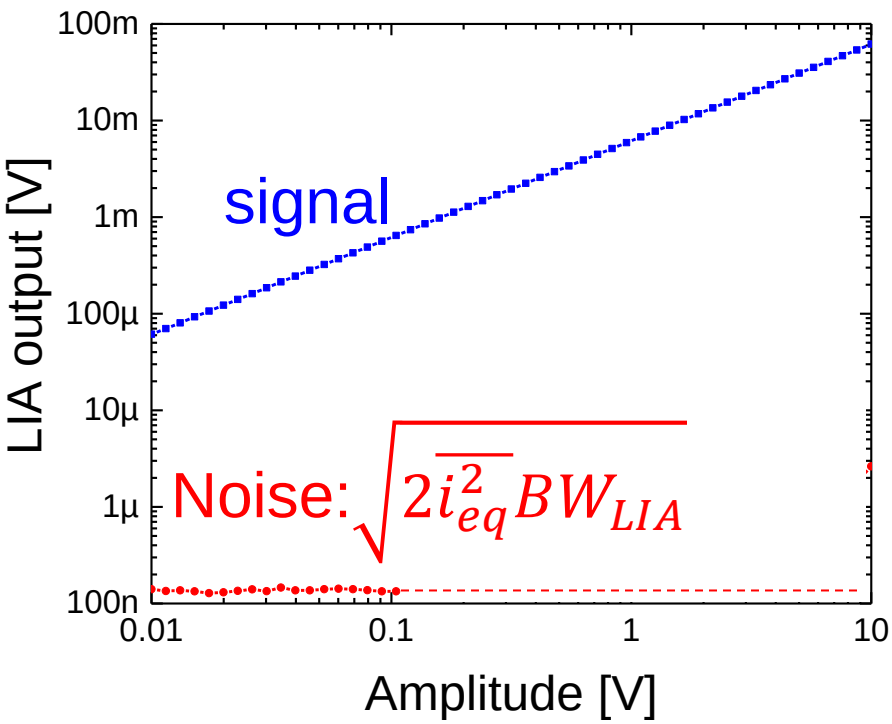

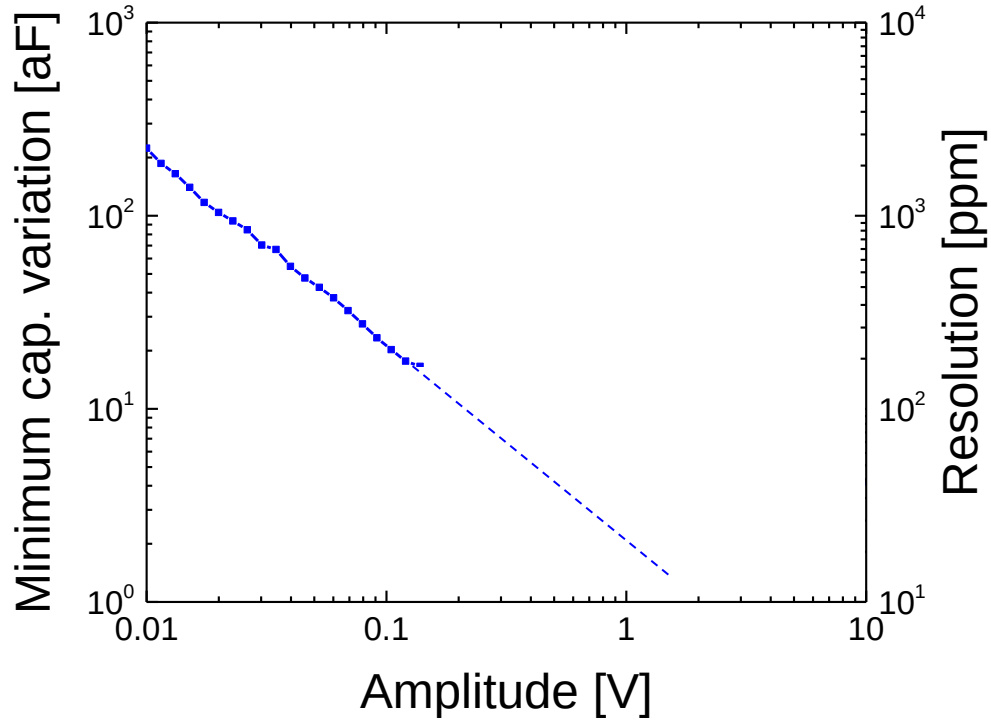

- LIA to avoid the 1/f noise
- C_x is «noise-free»

So, why is the resolution limited?

High resolution measurements require:

- Low-noise, wide-bandwidth circuits ✓
- Shift the signal to the best frequency ✓
- Limit the BW at the minimum ✓

M. Sampietro's lessons

… and a full control of the experimental setup:

- Low parasitic capacitance & good insulators (low dielectric noise) ✓
- Noise of the stimulus signal
- Temperature effects
- Analog-to-digital and digital-to-analog conversion
- …

Capacitive sensor + digital LIA

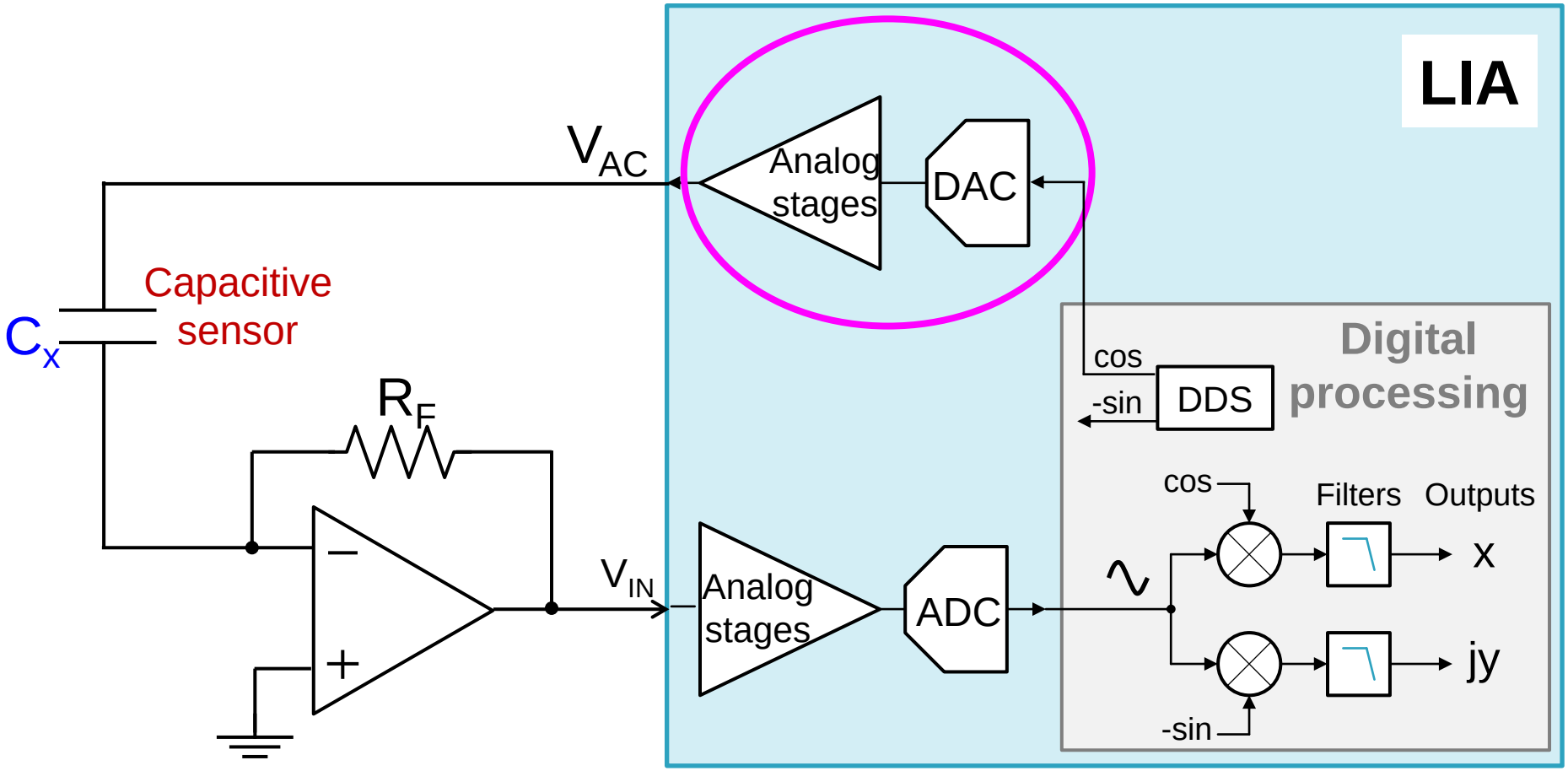

Noise of the stimulus signal

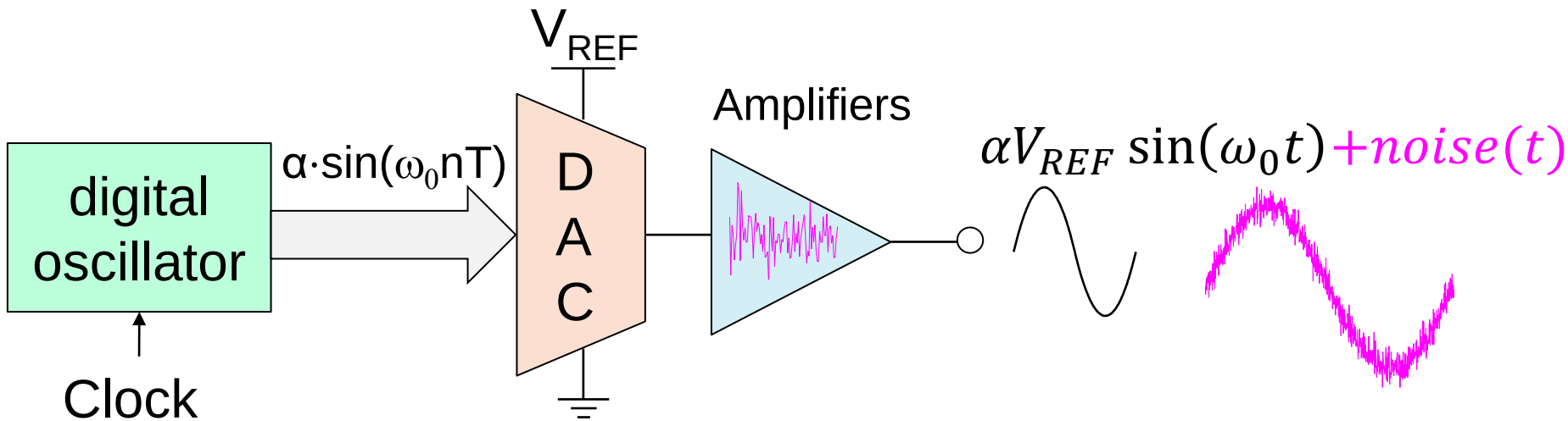

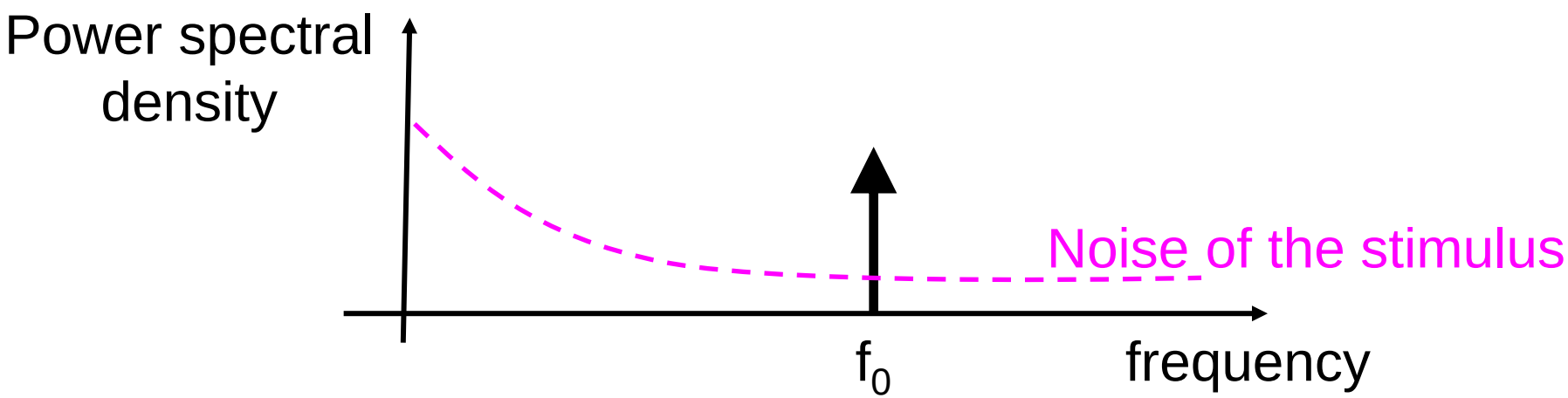

Stimulus: additive noise

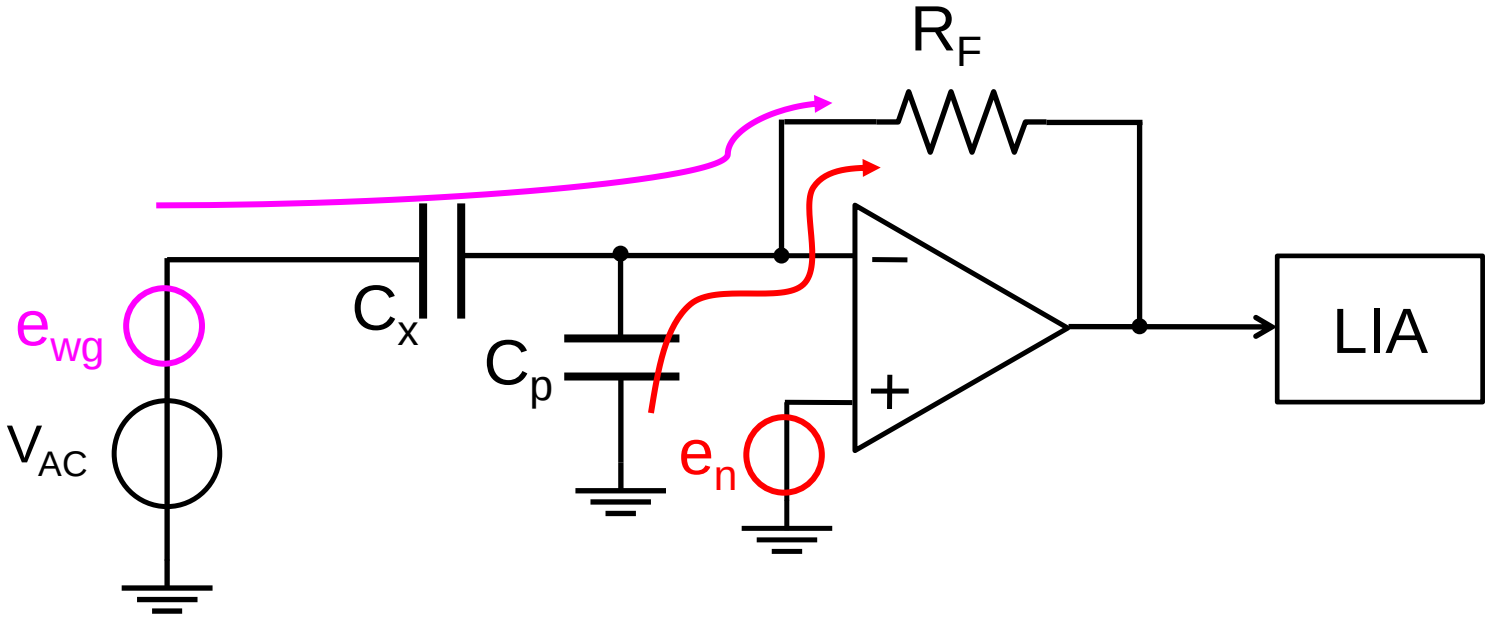

Eq. current noise = $\overline{e_n^2}\omega^2\left(C_p + C_x\right)^2 + \overline{e_{wg}^2}\omega^2 C_x^2$

Signal generators have more noise than good amplifiers:

$\overline{e_{wg}^2} \approx 25nV/\sqrt{Hz}$, $\overline{e_n^2} \approx 5nV/\sqrt{Hz}$

However, many nano/micro devices have $C_x \ll C_p$

Stimulus: additive noise

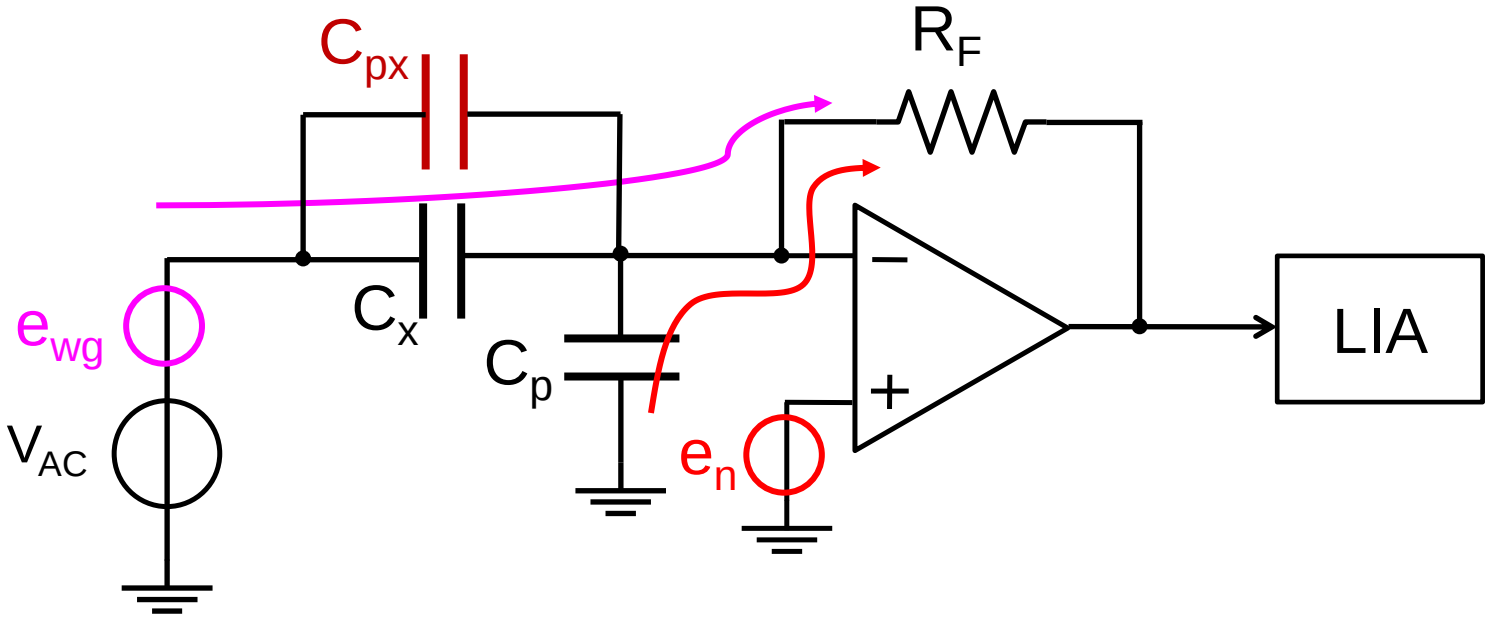

Eq. current noise = $\overline{e_n^2}\omega^2\left(C_p + C_x + C_{px}\right)^2 + \overline{e_{wg}^2}\omega^2\left(C_x + C_{px}\right)^2$

Signal generators have more noise than good amplifiers:

$\overline{e_{wg}^2} \approx 25nV/\sqrt{Hz}$, $\overline{e_n^2} \approx 5nV/\sqrt{Hz}$

However, many nano/micro devices have $C_x \ll C_p$

but as usual, pay attention to stray capacitances! (in parallel to C_x)

Stimulus: additive noise

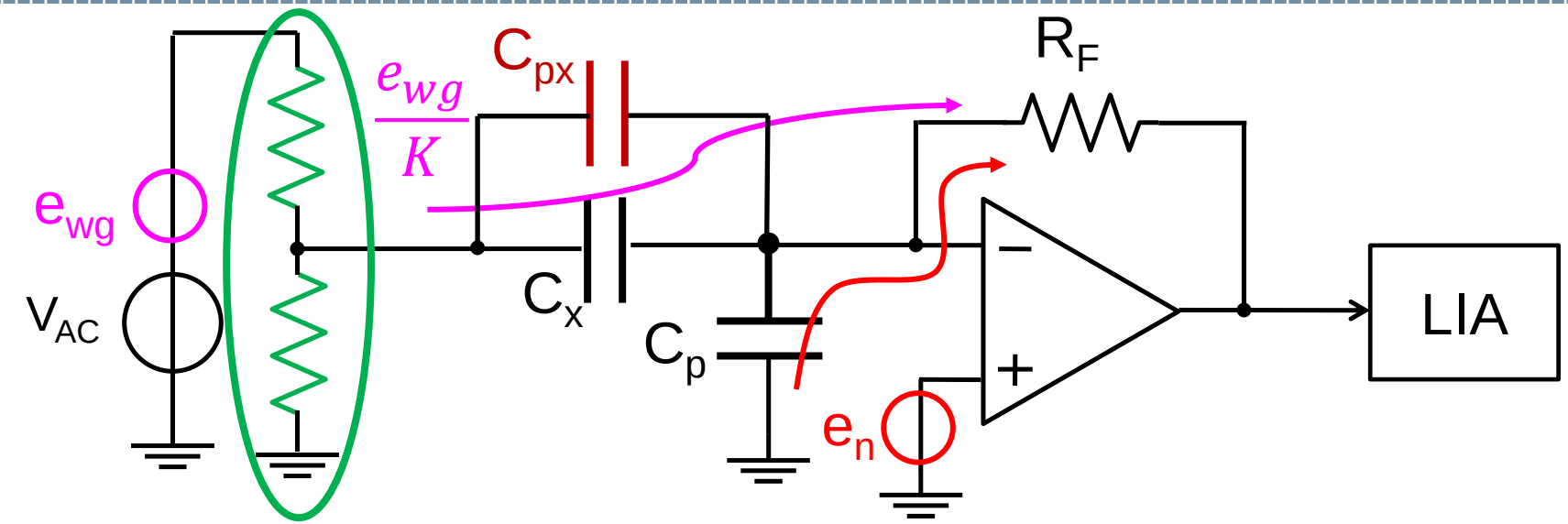

Voltage divider using small value resistors (≈ 50Ω)

A voltage divider can be beneficial **<u>if</u>** e_{wg} is independent of V_{AC}

Equivalent input noise = $\overline{e_n^2}\omega^2\left(C_p + C_x + C_{px}\right)^2 + \frac{\overline{e_{wg}^2}\omega^2\left(C_x+C_{px}\right)^2}{K^2}$

- Other technique: differential measurement (see later)

Noise of the stimulus signal

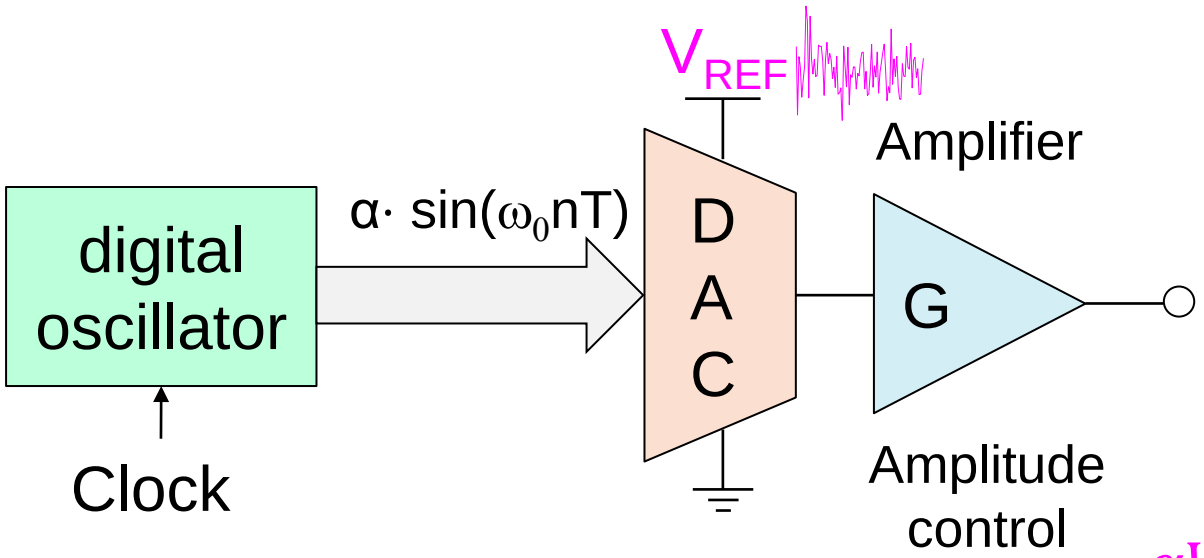

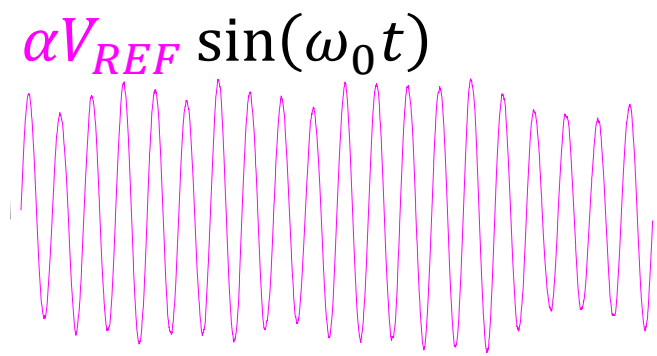

$$\alpha V_{REF} \sin(\omega_0 t)$$

$$\alpha V_{REF} \left(1 + n_A(t)\right) \sin(\omega_0 t)$$

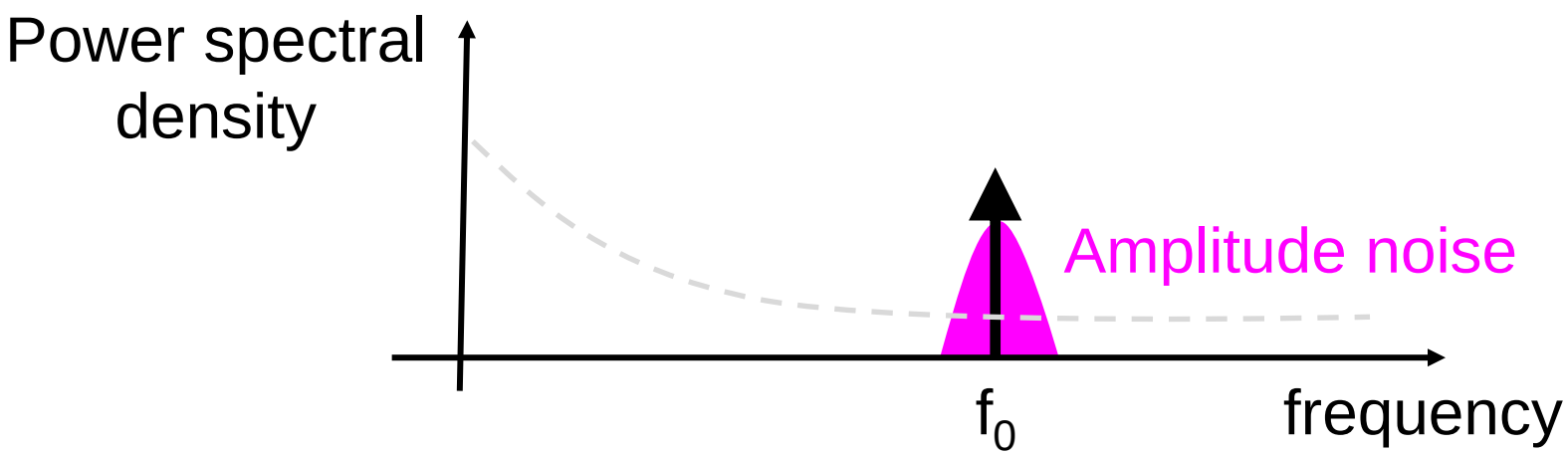

Stimulus: amplitude noise modulation

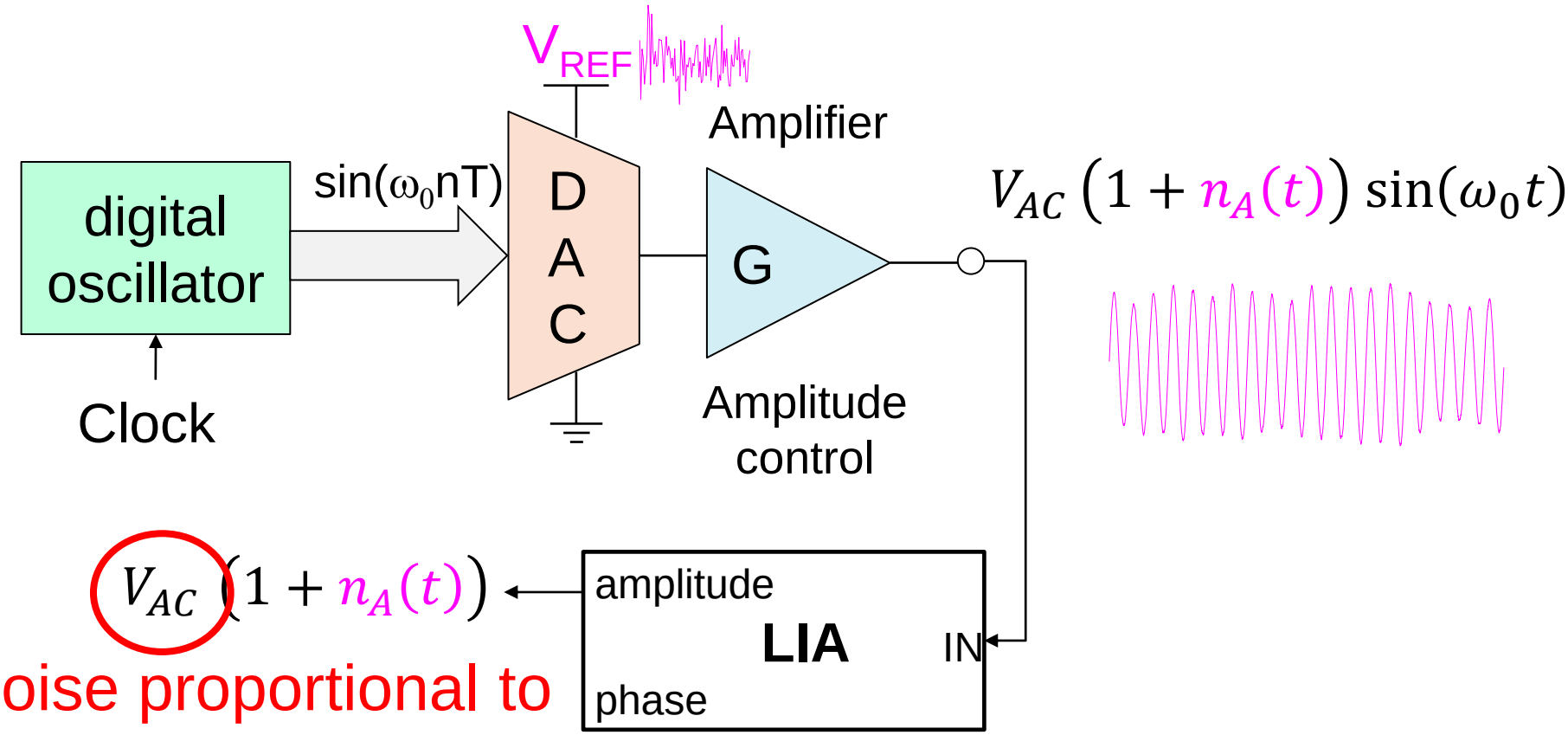

Noise proportional to the signal amplitude

The demodulated amplitude has the SAME noise behavior of V_{REF}

1/f noise at the output of the LIA!

(regardless of the frequency of the measurement)

Effect of amplitude noise modulation

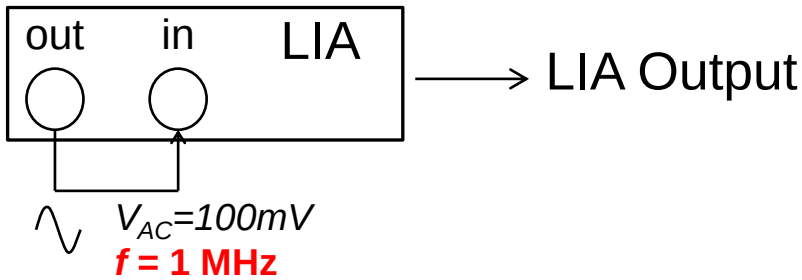

Example: amplitude noise of $10nV/\sqrt{Hz}$, 1/f corner frequency: 10Hz

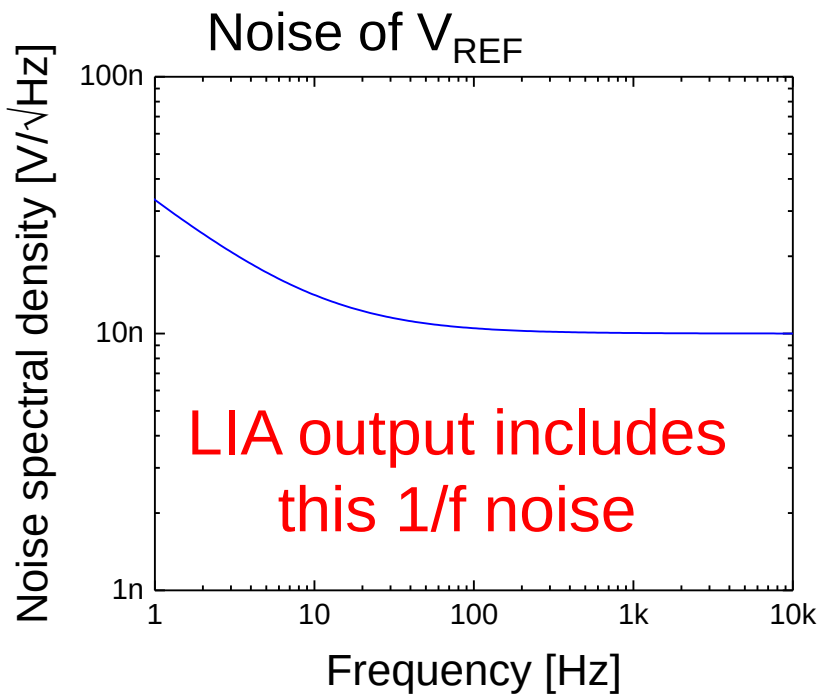

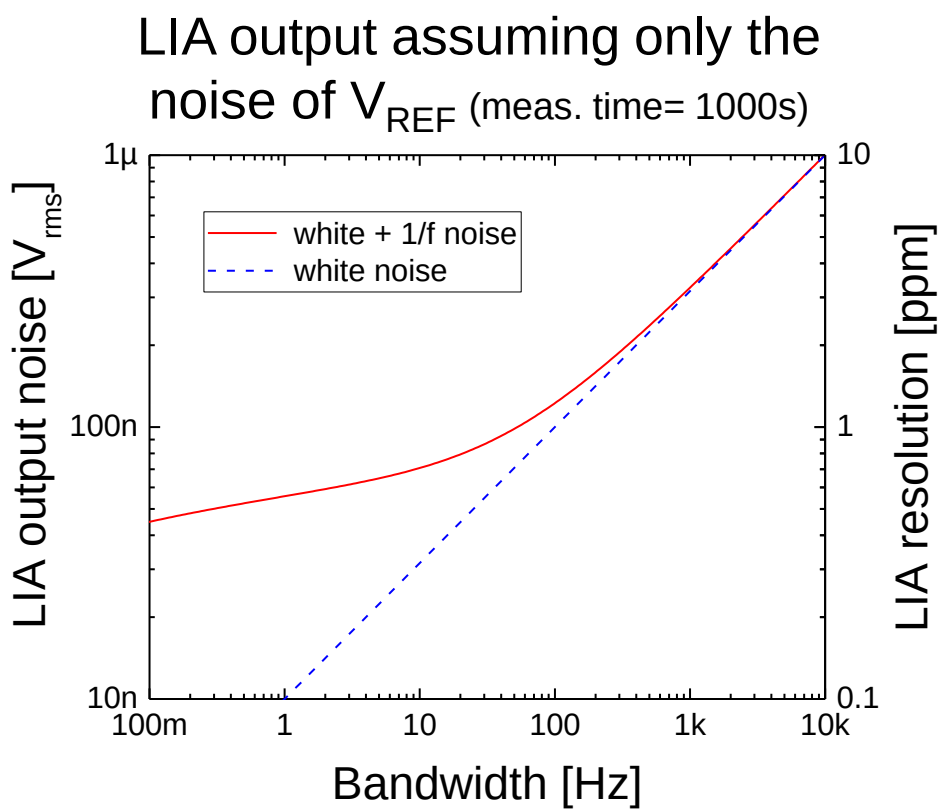

High resolution requires narrow BW → 1/f noise of AM set a limit!

Noise proportional to the signal: same resolution using V_{AC}=1V

Capacitive sensor + digital LIA

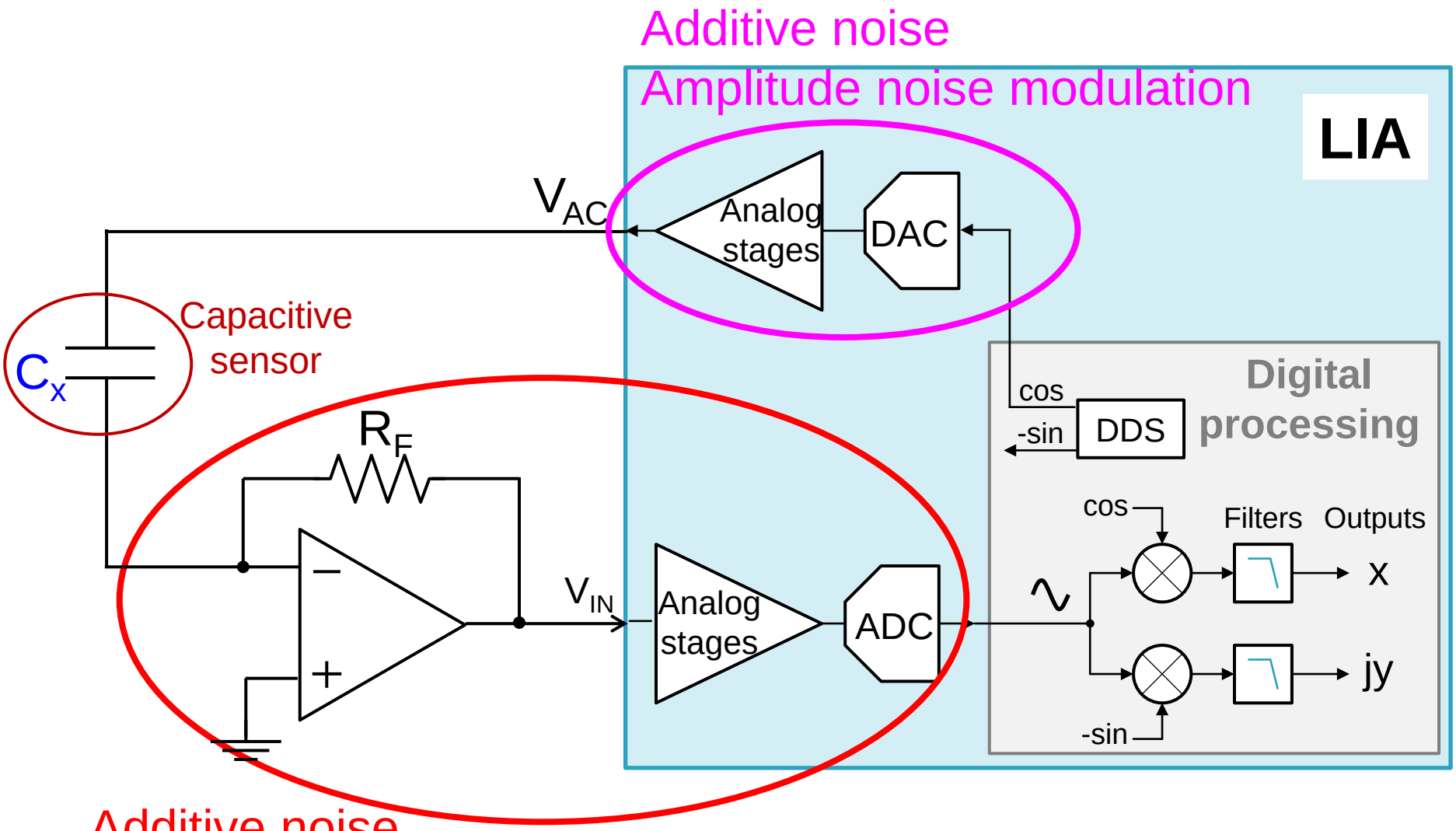

Temperature effects

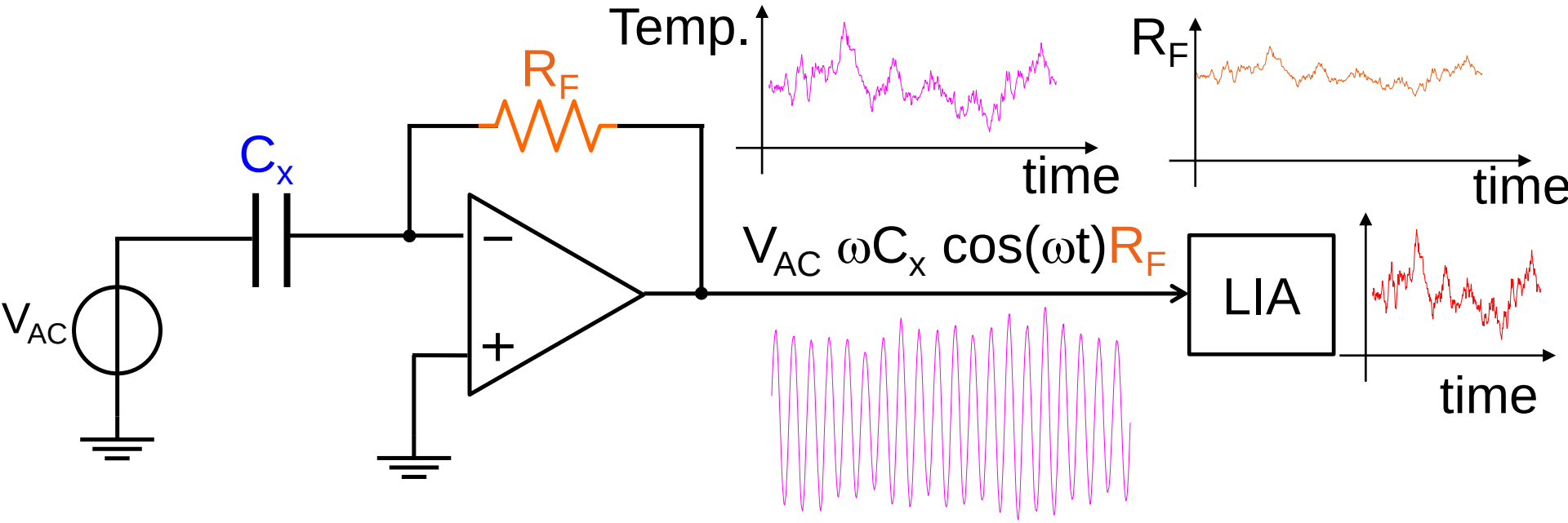

The gain fluctuations are shown in the LIA output (AM)

Temperature coeff. of standard R is 50 ppm/°C (≥100ppm/°C for high value resistors)

➡ 1 ppm requires a temperature stability better than 0.02 °C!

Temperature effects

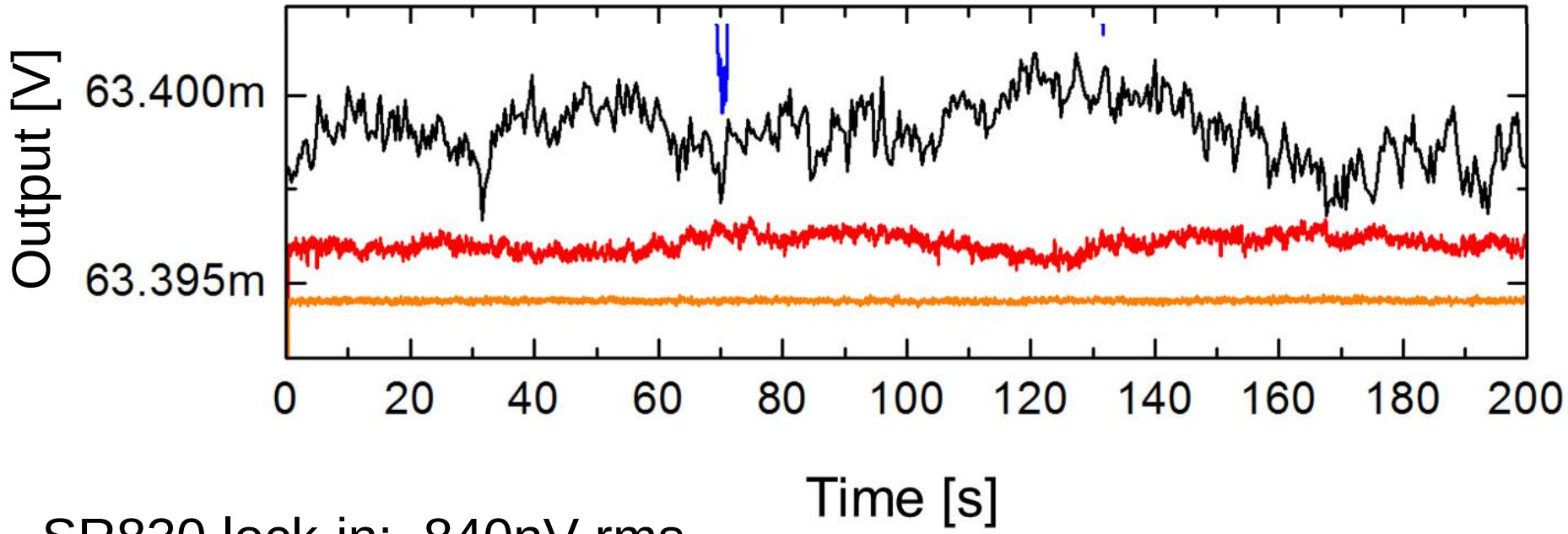

SR830 lock-in: 840nV rms

Custom lock-in: standard R (50 ppm/°C): 240nV rms (4 ppm)

LTC R (5 ppm/°C): 45 nV rms (0.7 ppm)

Choose components with a low-temperature coefficient for the elements setting the gain!

- (expensive) resistors with low temp. coef. (down to 1 ppm/°C)
- C0G capacitors («0 drift», less than 30 ppm/°C)
- Temperature controller
- See ELIA or differential measurements!

G. Gervasoni et al., 2014 IEEE BioCAS, pp. 316–319, 2014

Gain fluctuations

Most crucial stage for the additive noise
(equivalent input noise)

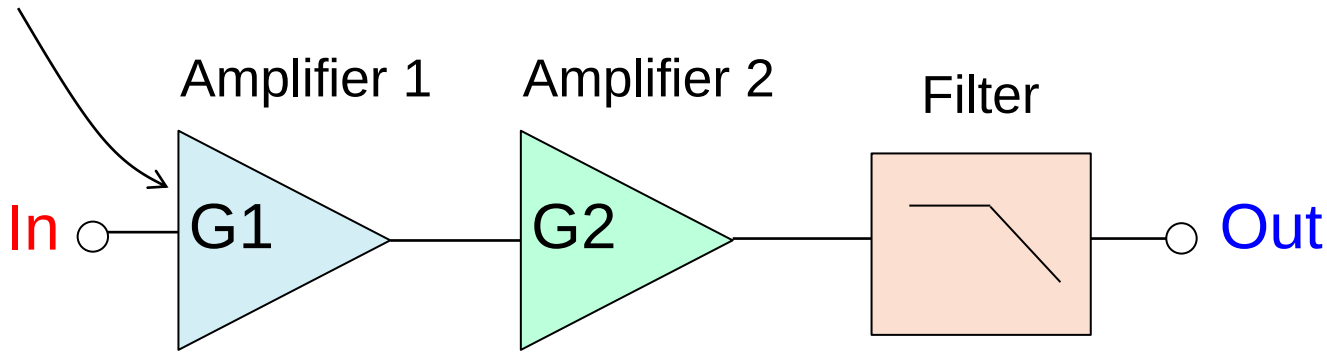

$$\text{Out} = G1 \cdot G2 \cdot G_{FILTER} \cdot \text{In}$$

All stages are equally important for the amplitude noise!

Low temp. coef. components along the entire signal path

Digital lock-in amplifier

Additive noise
Amplitude noise modulation

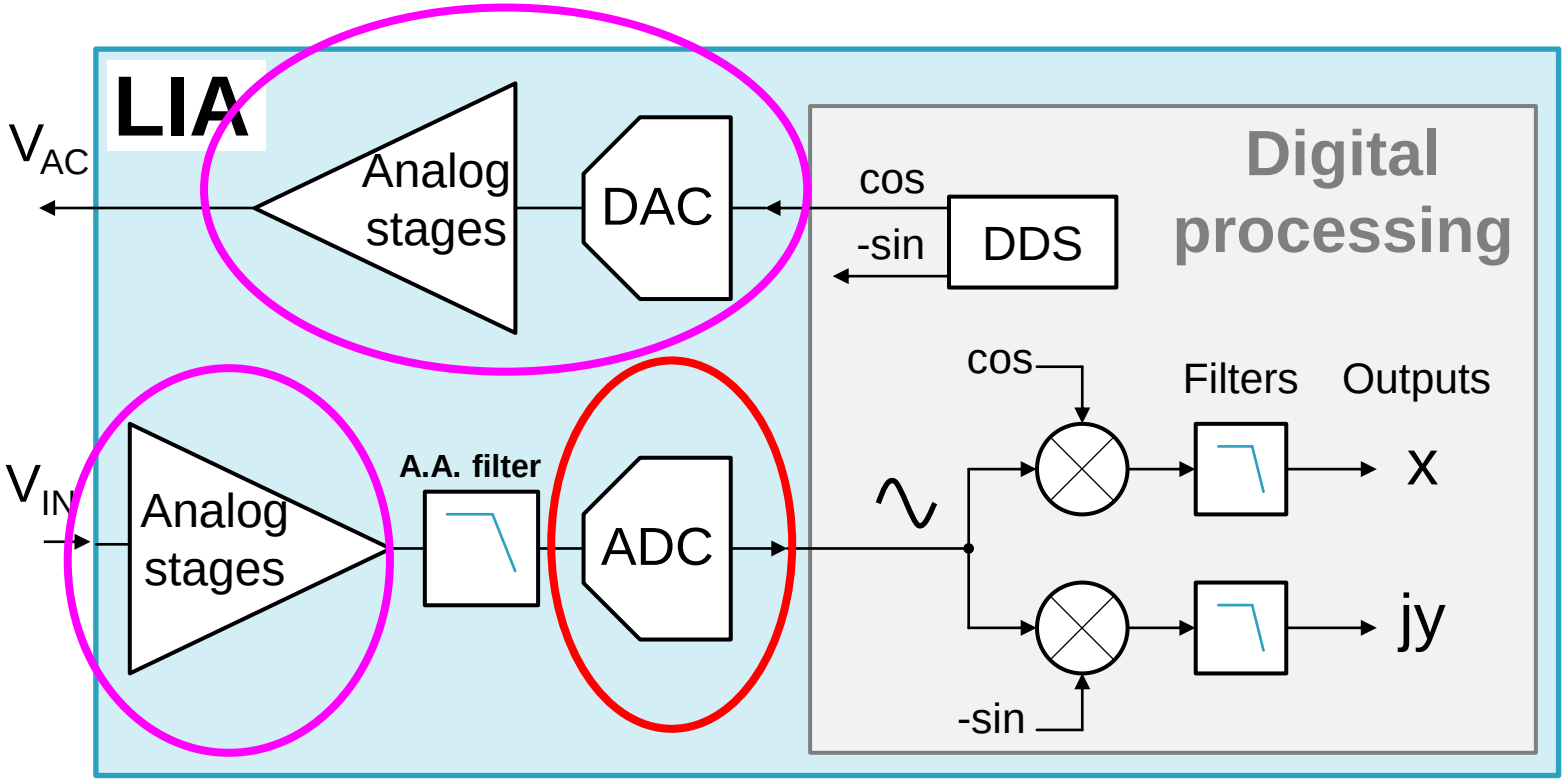

Additive noise
Gain fluctuations

ADC: amplitude noise modulation

$$V_{B,IN}(t) = Asin(\omega_0 t)$$

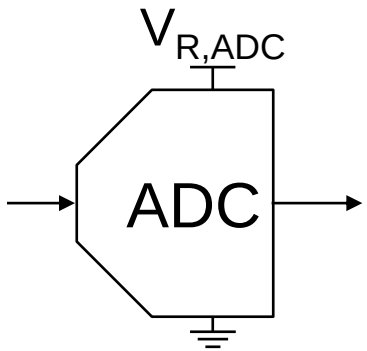

$$V_{dig}(iT_s) \propto \frac{Asin(\omega_0 iT_s)}{V_{R,ADC}}$$

ADC: amplitude noise modulation

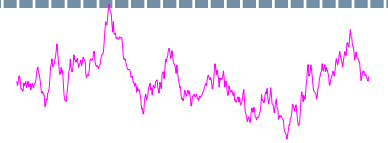

$V_{R,ADC}[1+n_{R,ADC}(t)]$

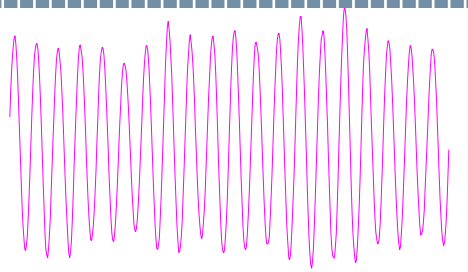

$$V_{B,IN}(t) = Asin(\omega_0 t) \rightarrow \text{ADC} \rightarrow$$

$$V_{dig}(iT_s) \propto \frac{Asin(\omega_0 iT_s)}{V_{R,ADC}[1 + n_{R,ADC}(iT_s)]}$$

Power spectral density of $V_{R,ADC}$

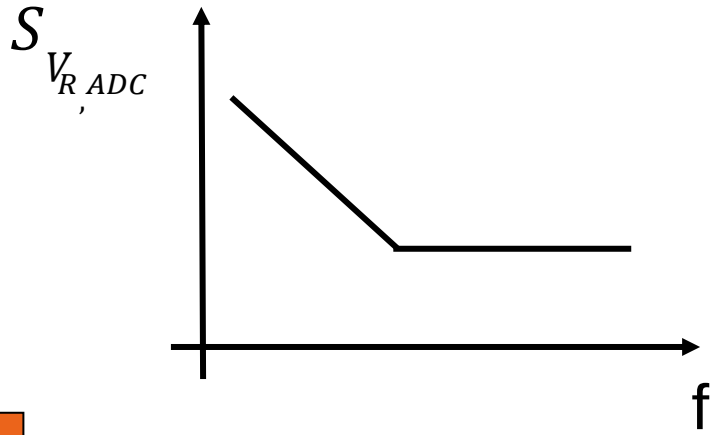

Unavoidable slow fluctuations of the ADC gain
(voltage reference, internal circuital elements)

Unavoidable fluctuations of the amplitude measured by the LIA!

Quantization error

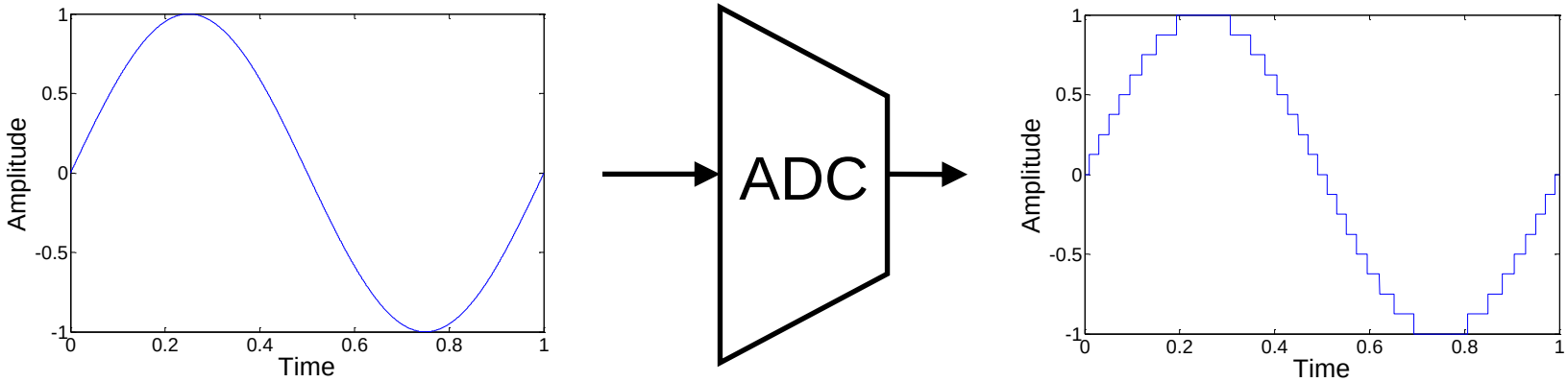

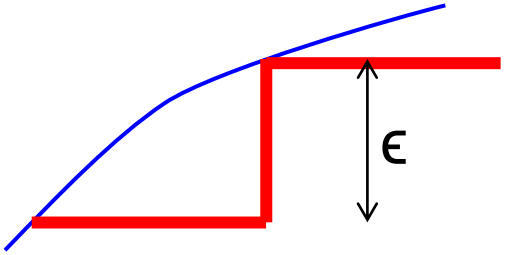

$2^{\text{number of bit}}$ levels → quantization error

Quantization error < 1 ppm → >20 bit

… but 20-bit ADCs are slow

no fast high-resolution digital LIA?

We average a large number of samples!

Quantization error

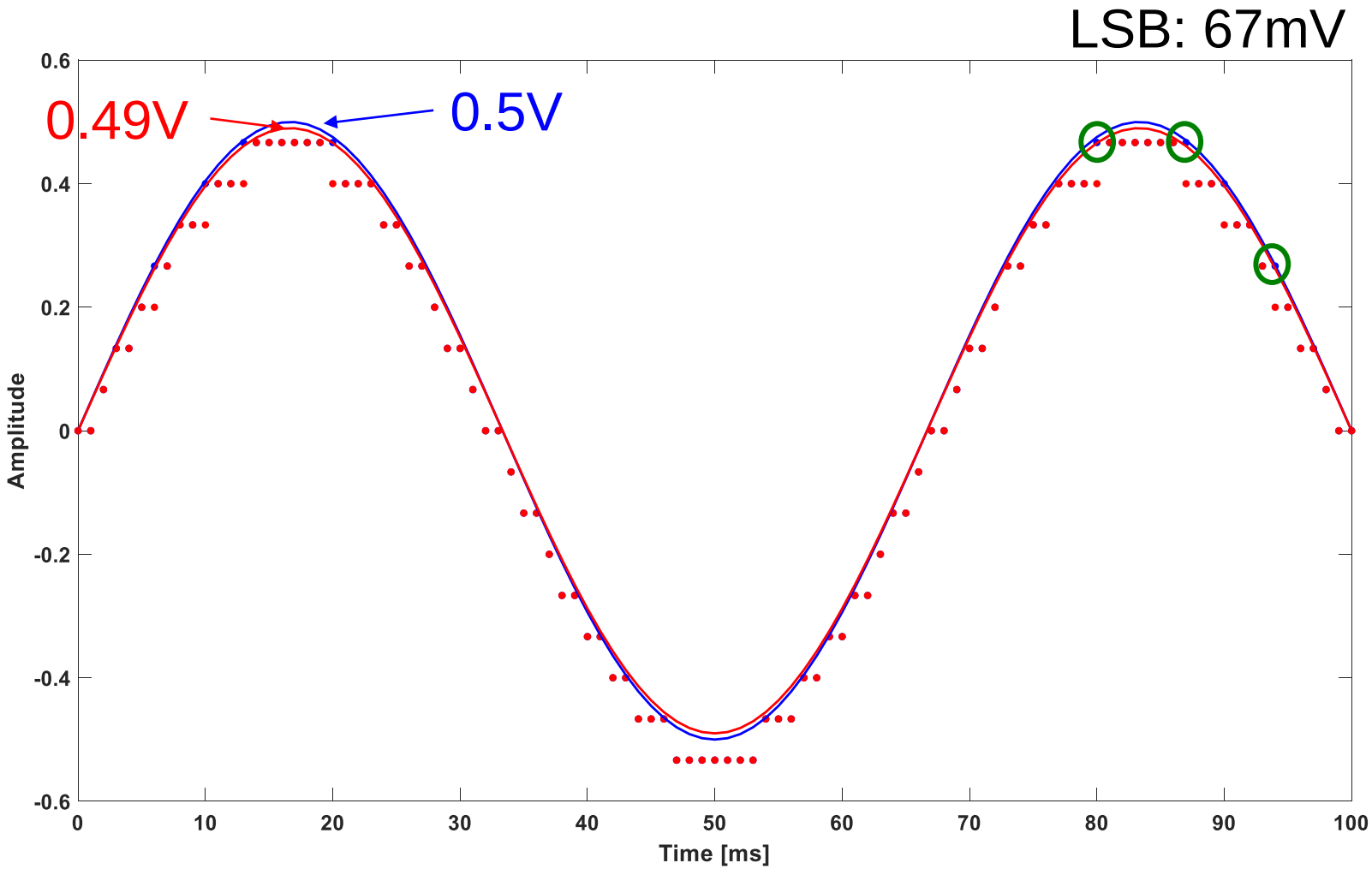

Although the amplitude difference (10mV) is less than the quantization step (67mV), few samples are different

Measured values: 0.502V and 0.494V

Quantization error

V_{AC}=0.5V, f_0=100kHz

$V_{REF,ADC}$=±1V, f_s=50MS/s, BW_{LIA}≈100Hz

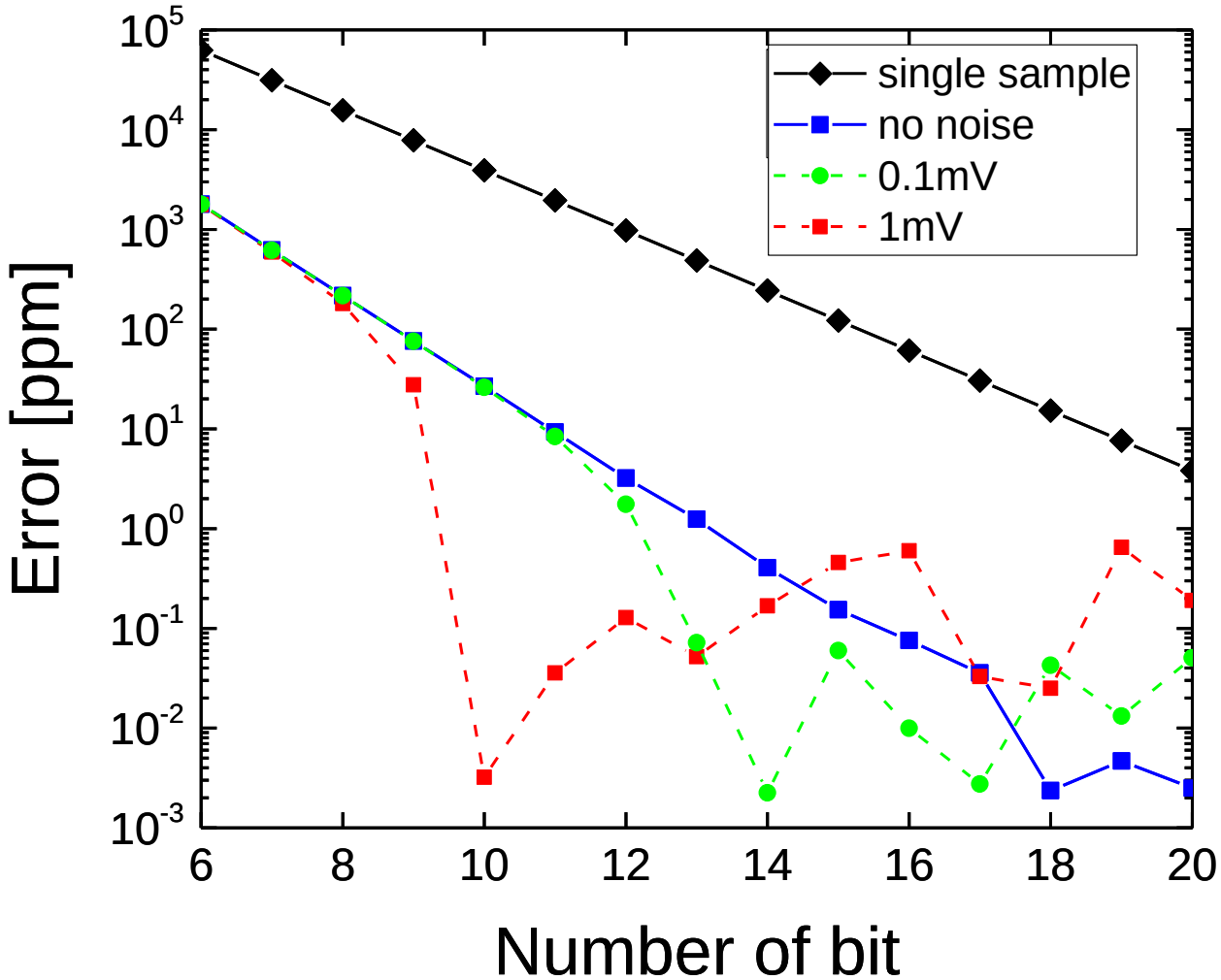

…the noise further reduces the quantization error!

Things to remember

High-resolution measurements require complete control of the experimental setup:

- Noise of the input amplifier
- Noise of the sensor
- Limit the effect of 1/f noise! (use LIA if possible)

} Minimum detectable signal

- Slow (1/f) random fluctuations of the system gain:
  - Signal source (DAC, optical source,…)
  - Temperature dependence of amplifier/filter gains (C, R,…)
  - Gain fluctuation of ADC
  - Quantization error is less critical: high resolution usually requires the average of many samples
  - A standard LIA does NOT solve the problem of gain fluctuations

OUTLOOK of the LESSON

- Introduction to the problem
- Noise sources limiting high-resolution measurements:
  - Additive noise sources
  - Multiplicative noise sources
- Solutions:
  - Ratiometric technique
    - ELIA: Enhanced Lock-In Amplifier
  - Differential approach

Thursday lesson

Resolution limits of LIAs

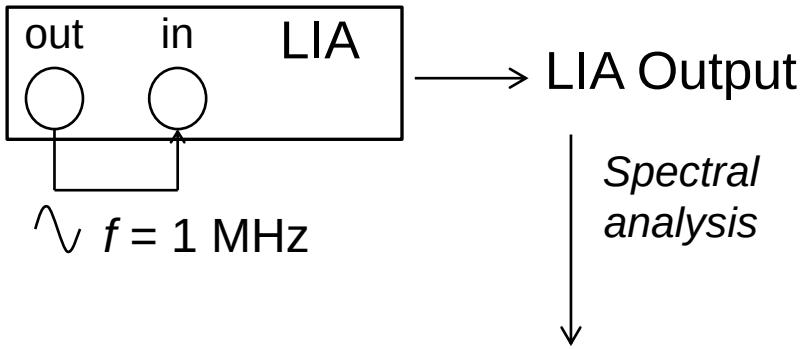

Zurich Instruments, HF2LI

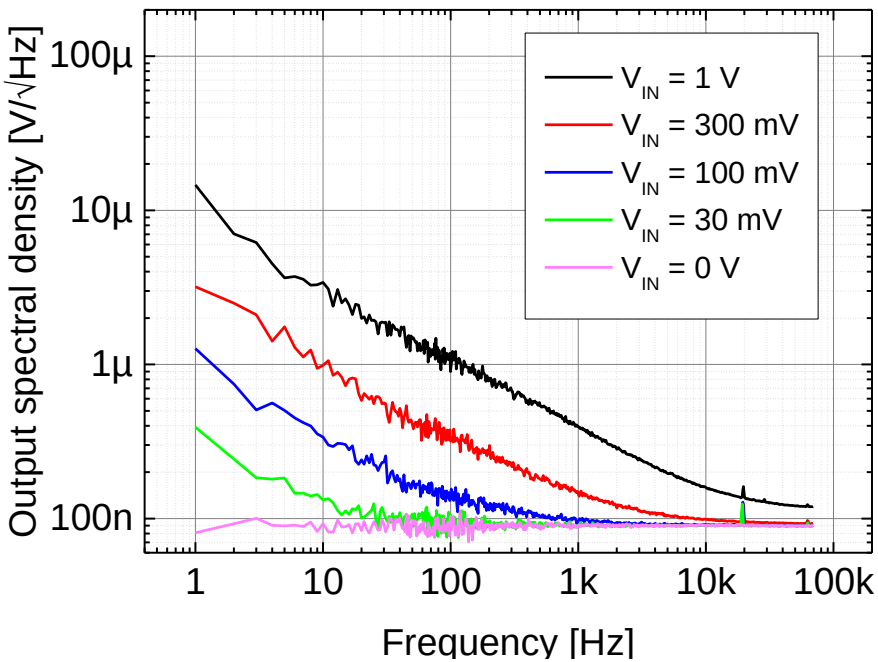

Resolution = Noise / Signal

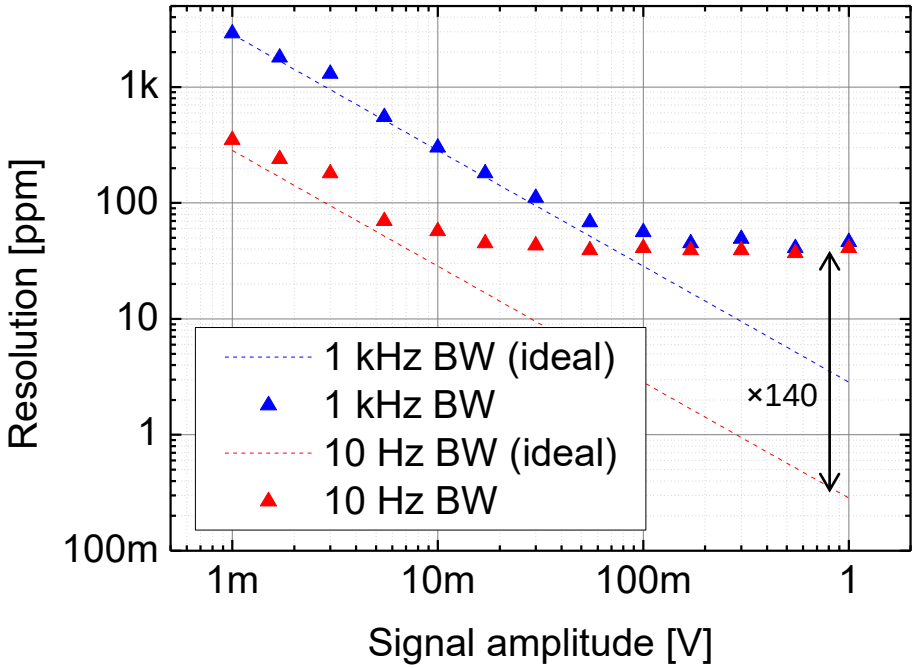

$$\text{Noise} \approx \sqrt{input\ noise \cdot BW + kV_{AC}^2}$$

A common limit for high-speed LIA

Model	Maximum frequency [MHz]	Signal amplitude [V]	Measurement frequency [MHz]	Relative resolution [ppm]
Custom LIA [1]	0.1	0.1, 0.3, 1	0.01, 0.05	1
SR830 (Stanford Research Systems)	0.1	0.1, 0.3, 1	0.01, 0.05	12
MCL1-540 (SynkTek)	0.5	1.4	0.1	1.3
SR865 (Stanford Research Systems)	2	0.3	0.5	45
Custom LIA [2]	10	0.03, 0.1, 0.3, 1	0.1, 1	9
HF2LI (Zurich Instruments)	50	0.03, 0.1, 0.3, 1	0.1, 1, 10	39

[1] G. Gervasoni et al., 2014 IEEE BioCAS, pp. 316–319, 2014
[2] M. Carminati et al., 2012 IEEE I2MTC, pp. 264–267, 2012.

The ultimate resolution is limited by gain fluctuations and NOT by the amplifier noise (< 1 ppm)

How to improve the resolution ?

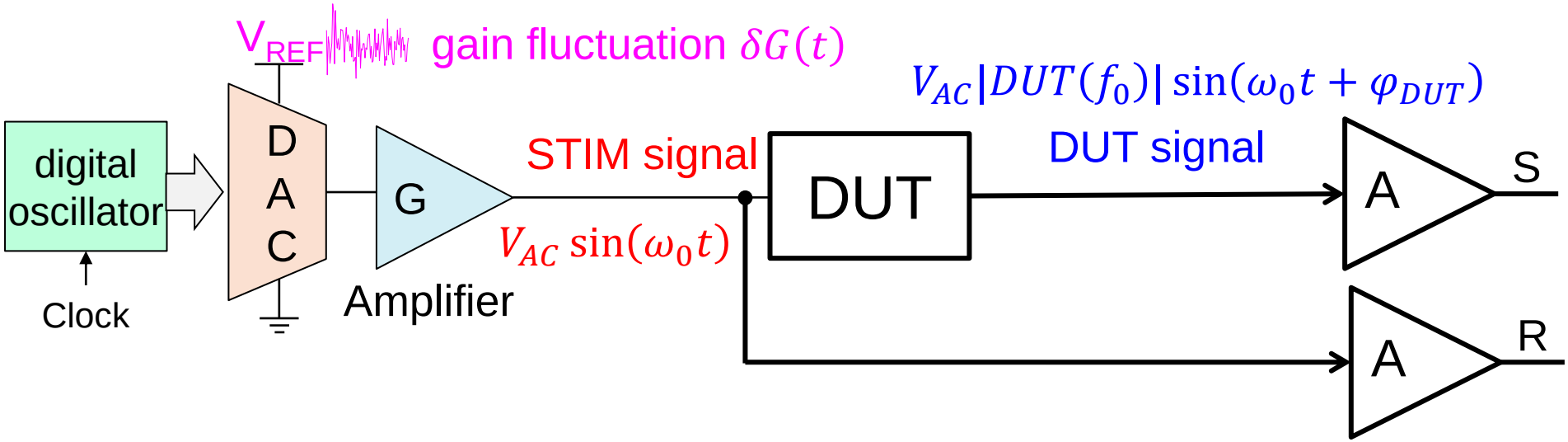

$STIM_{real} = STIM_{id}(1+\delta G(t))$ ➡ $S_{DUT,real} = S_{DUT,id}\,(1+\delta G(t))$

Ratiometric approach:

$$\frac{S}{R} = \frac{S_{DUT,real}}{STIM_{real}} = \frac{S_{DUT,id}\cdot\cancel{(1+\delta G(t))}\cdot A}{STIM_{id}\cdot\cancel{(1+\delta G(t))}\cdot A}$$

independent of A and δG(t)!

No fine-tuning between *S* and *R* amplitudes is required

Standard digital LIA

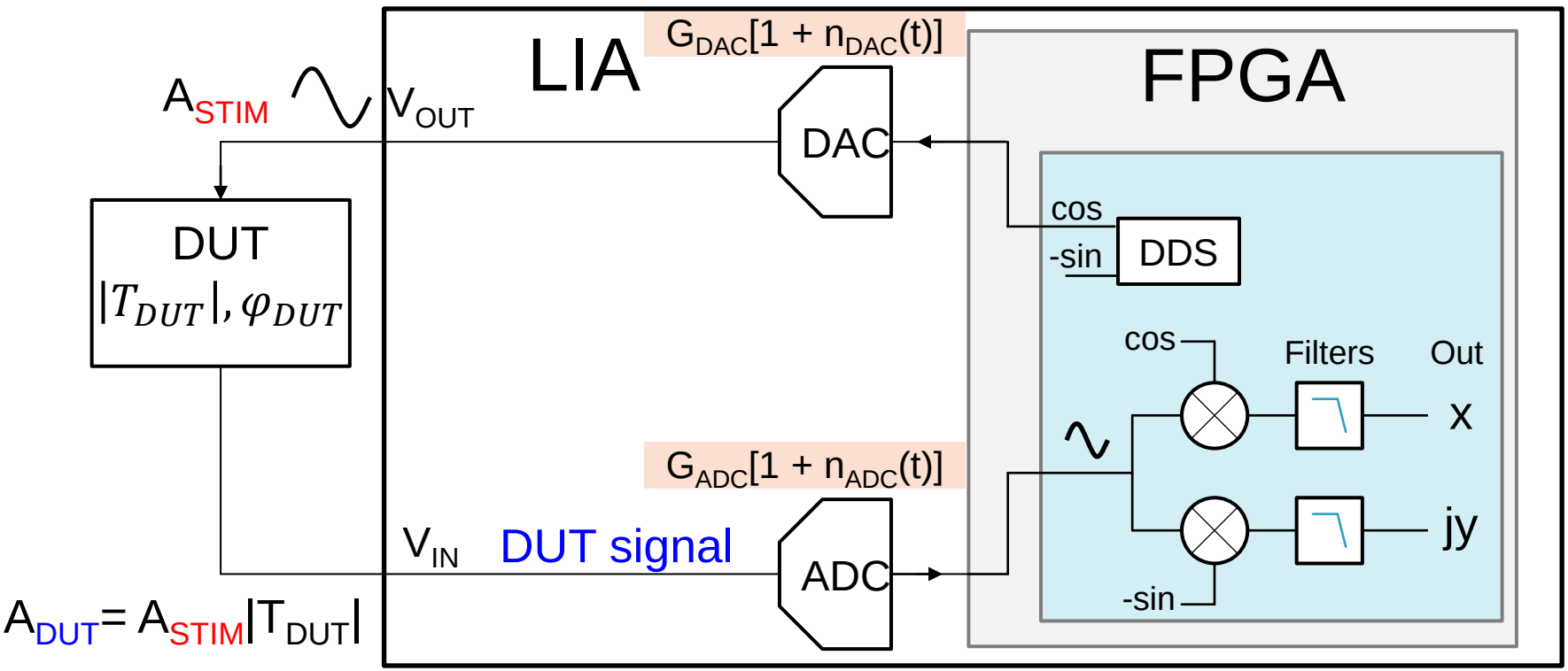

$$\sqrt{x^2 + y^2} = A_{DUT} = A_{STIM}|T_{DUT}|\, G_{ADC}[1 + n_{ADC}(t)]\, G_{DAC}[1 + n_{DAC}(t)]$$

(+ any gain fluctuations of the analog stages)

Ratiometric LIA

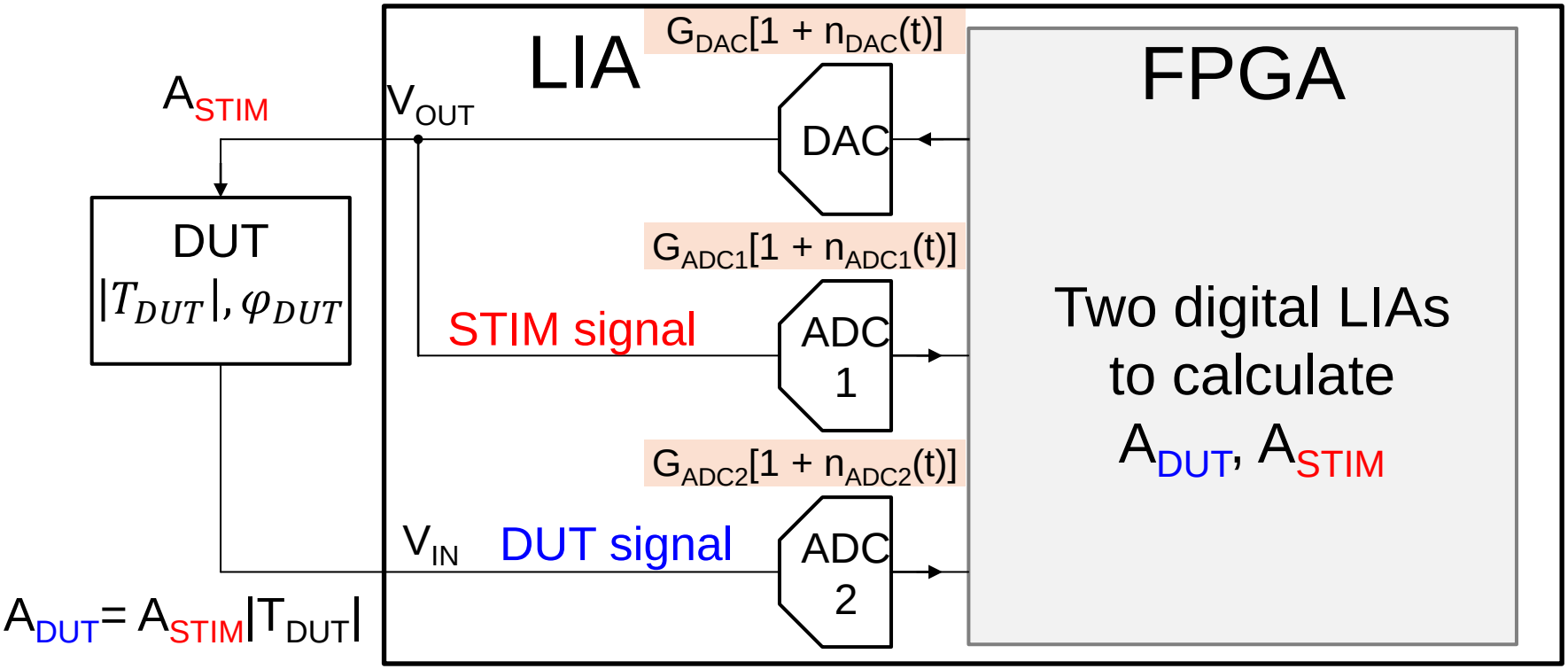

$$\frac{A_{DUT}}{A_{STIM}} = |T_{DUT}| \cancel{\frac{G_{DAC}[1 + n_{DAC}(t)]}{G_{DAC}[1 + n_{DAC}(t)]}} \frac{G_{ADC2}[1 + n_{ADC2}(t)]}{G_{ADC1}[1 + n_{ADC1}(t)]}$$

still amplitude noise!

Enhanced-LIA (ELIA)

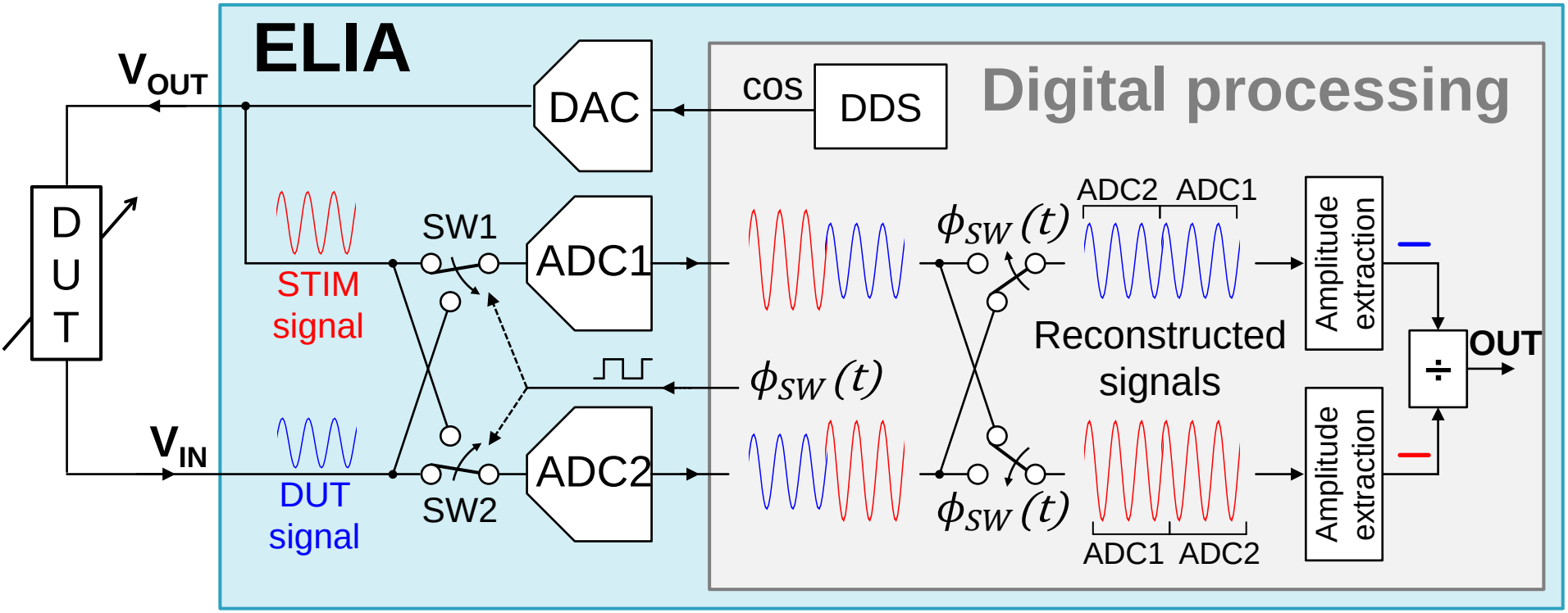

- Digital ratiometric approach
- ≈ kHz switching frequency to mix the ADC fluctuations
- Signal reconstruction and LIA demodulation

ELIA: time domain analysis

Gain of the acquired signals

Gain of the reconstructed signals

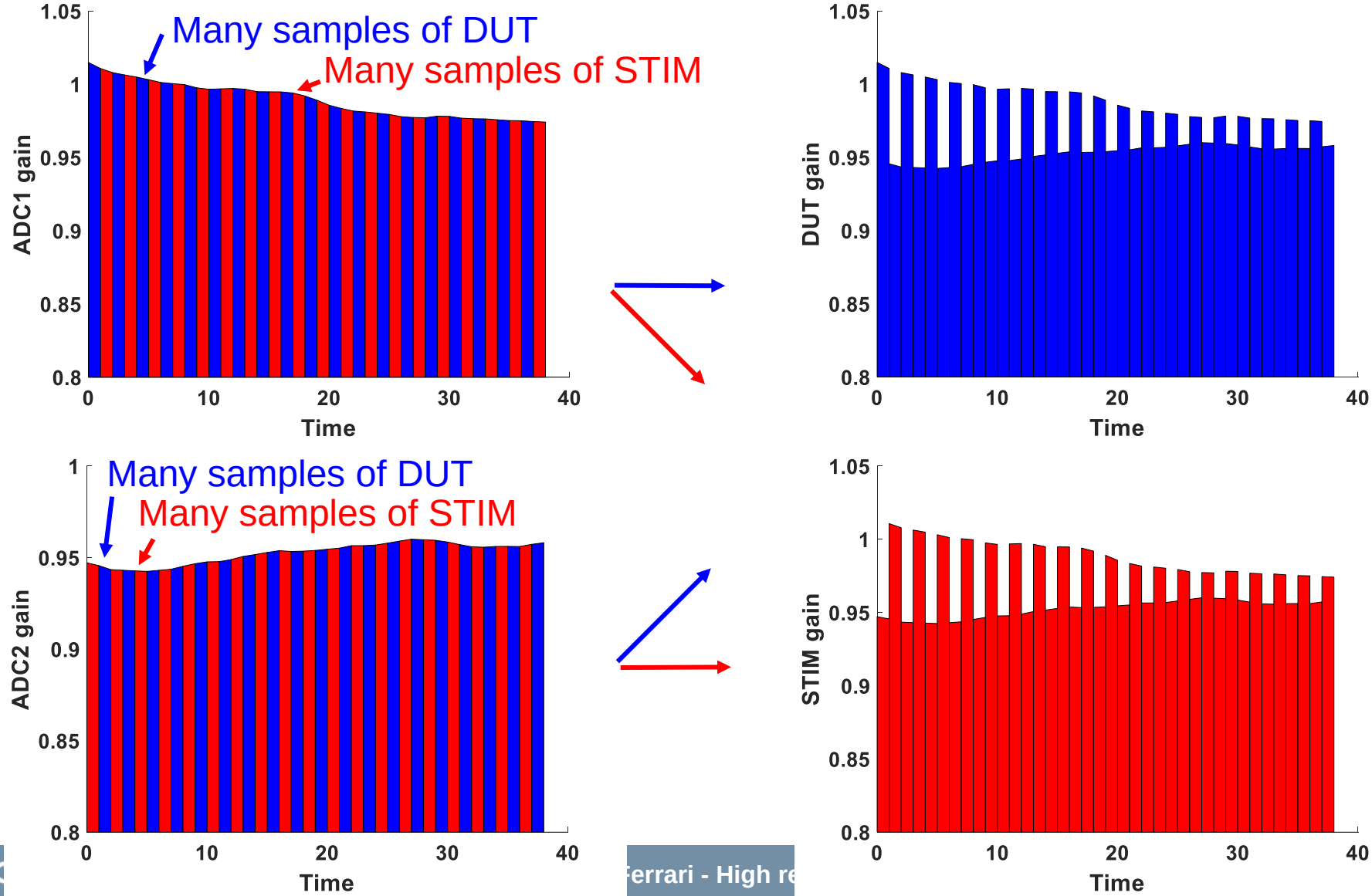

ELIA: time domain analysis

Gain of the acquired signals

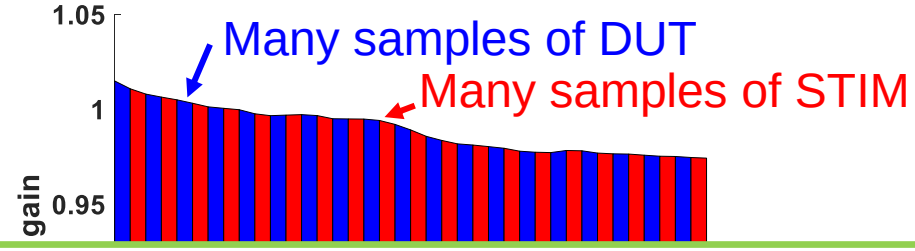

If the switching period is faster than the gain fluctuations

→ same mean gain!

$$\frac{A_{DUT}}{A_{STIM}} \approx |T_{DUT}|$$

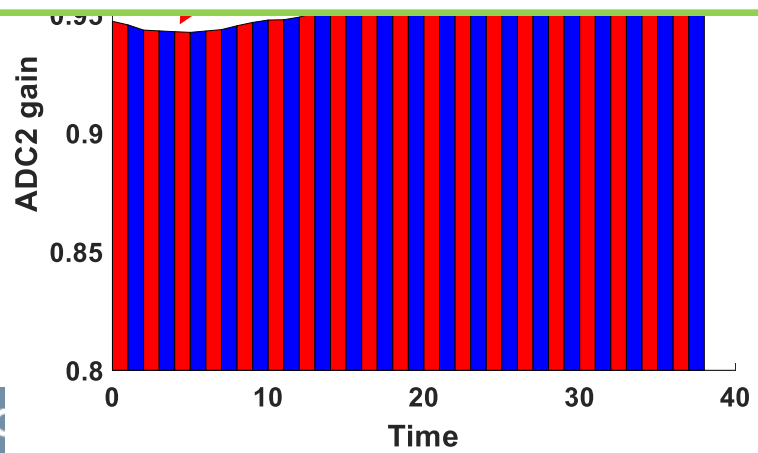

Gain of the reconstructed signals

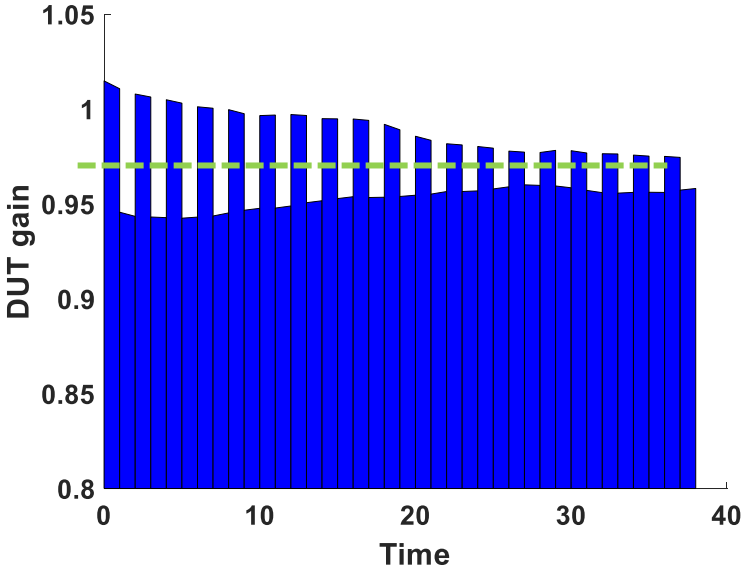

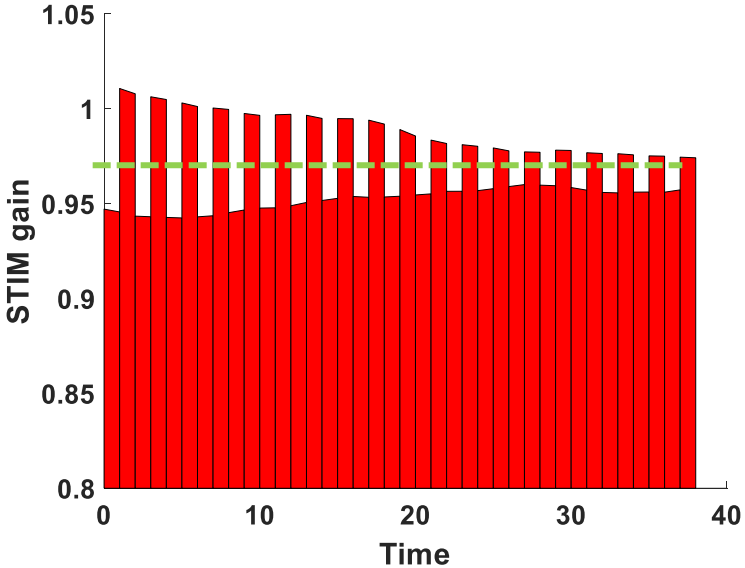

ELIA prototype

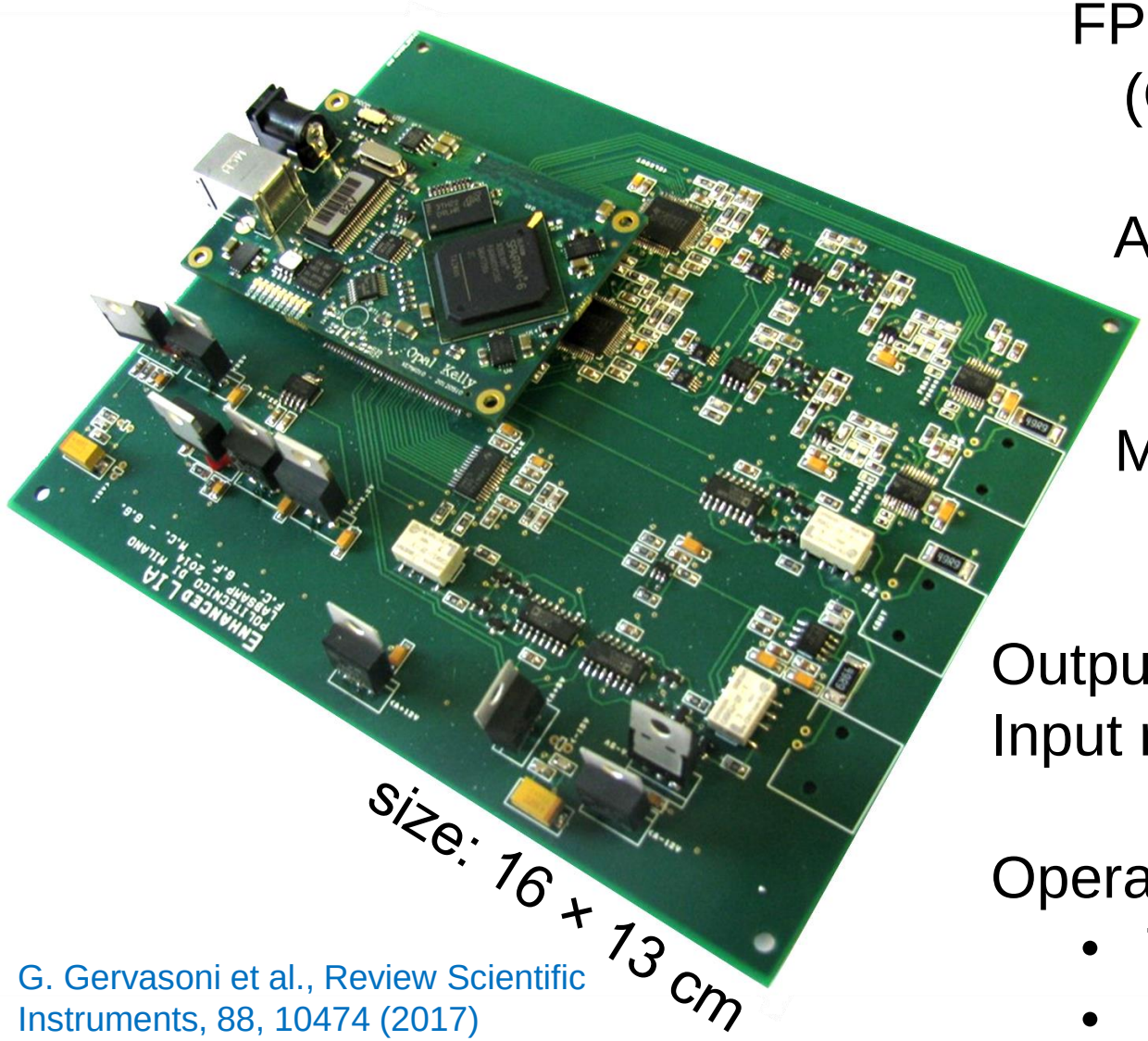

size: 16 x 13 cm

FPGA: Xilinx Spartan 6
(Opal Kelly module)

ADC&DAC: 80MS/s

Maximum AC frequency:
10MHz

Output: 50μV – 10V
Input range: ±100mV - ±10V

Operating modes:

- Two standard LIAs
- ELIA

G. Gervasoni et al., Review Scientific Instruments, 88, 10474 (2017)

Experimental validation

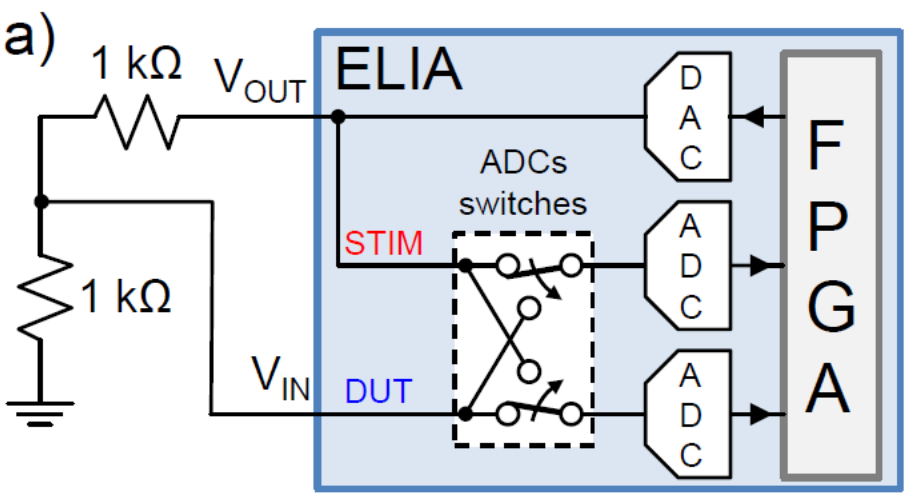

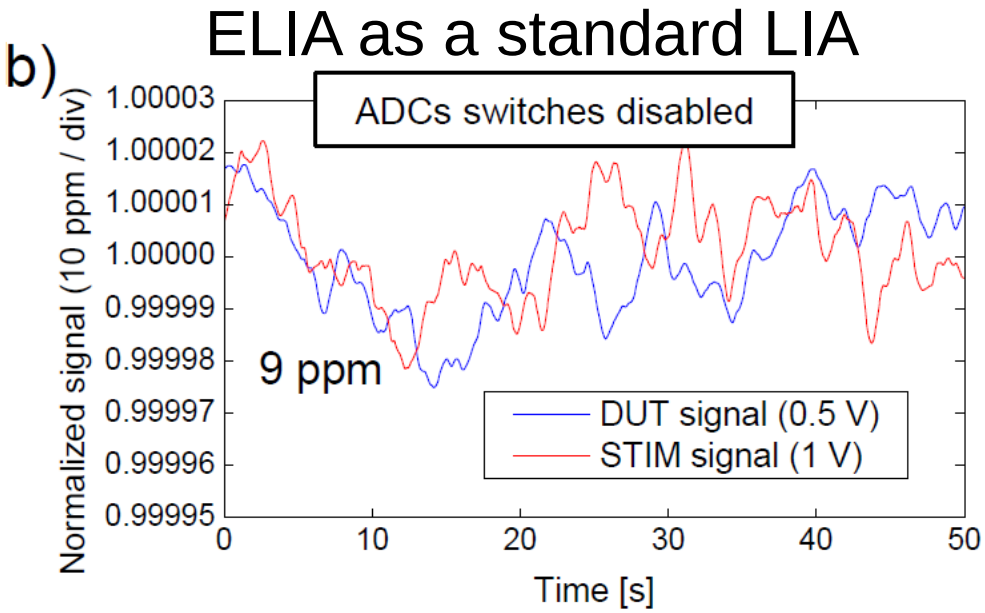

Expected resolution – ideal LIA:

- Thermal noise of resistors (2.8nV/√Hz) + input noise of the amplifier (2.2nV/√Hz)
- BW = 1Hz

$$\Delta V_{noise} \approx \sqrt{2}\sqrt{(2.8nV)^2 + (2.2nV)^2} = 5\ nV$$

Relative resolution: $\frac{\Delta V_{noise}}{0.5V} = 0.01\text{ppm}\ !$

Experimental validation

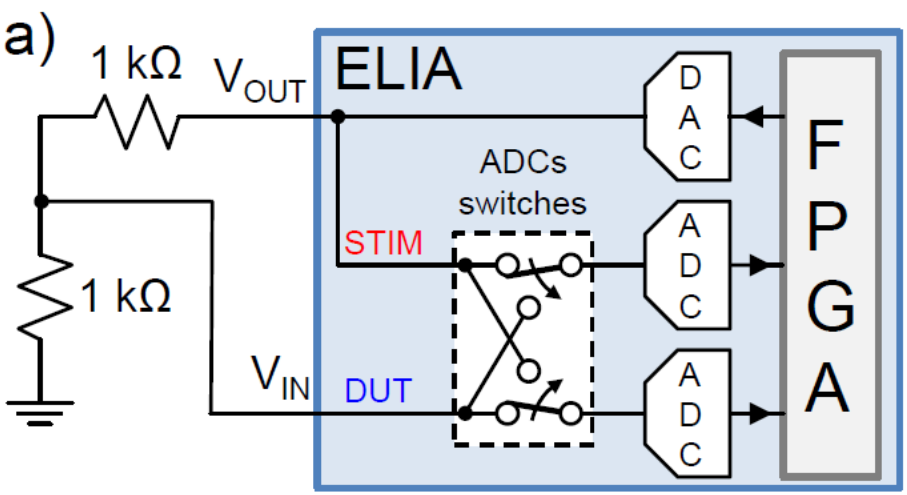

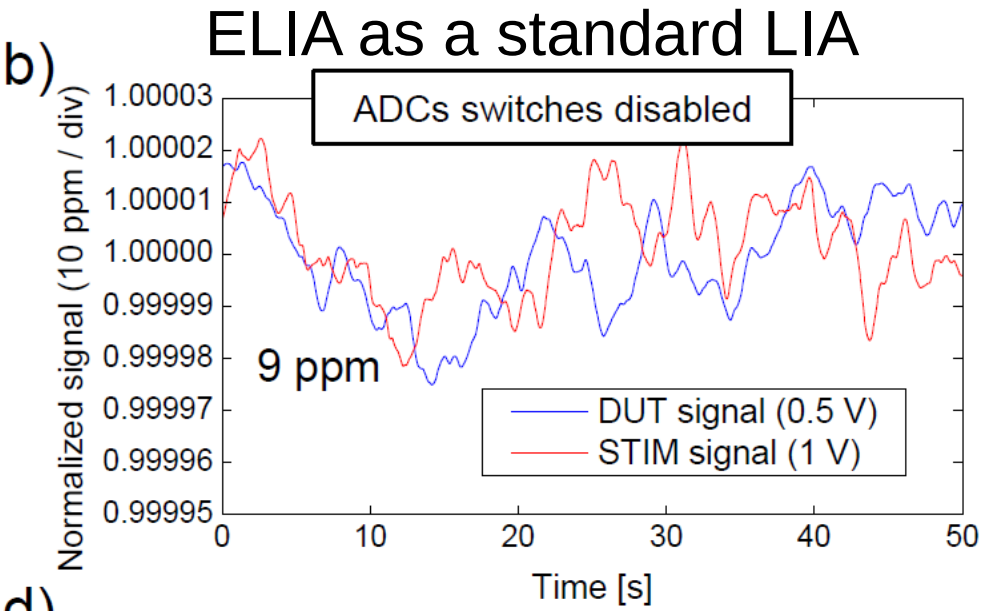

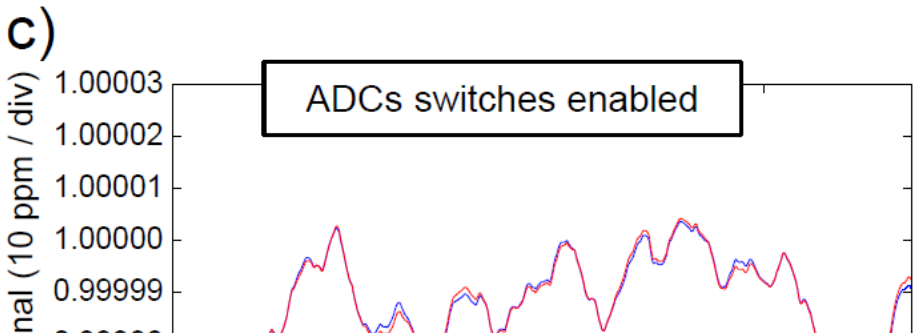

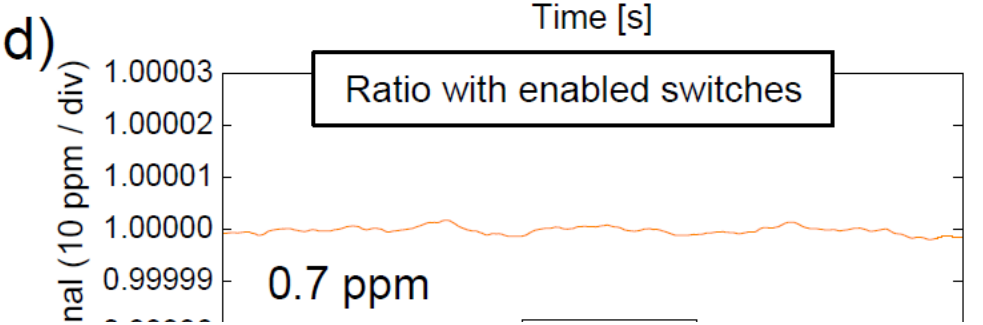

NOTE: the ratiometric approach does NOT improve the SNR if the additive noise is dominant: $\frac{A_{DUT}+noise_{DUT}}{A_{STIM}+noise_{STIM}} \neq |T_{DUT}|$

High resolution spectroscopy

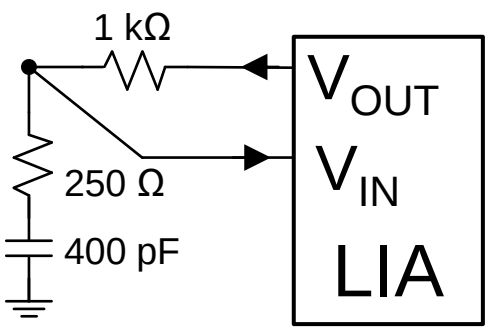

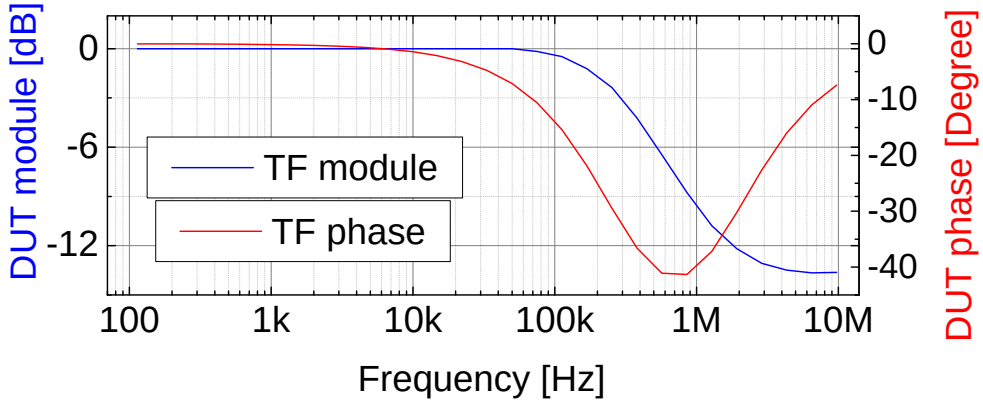

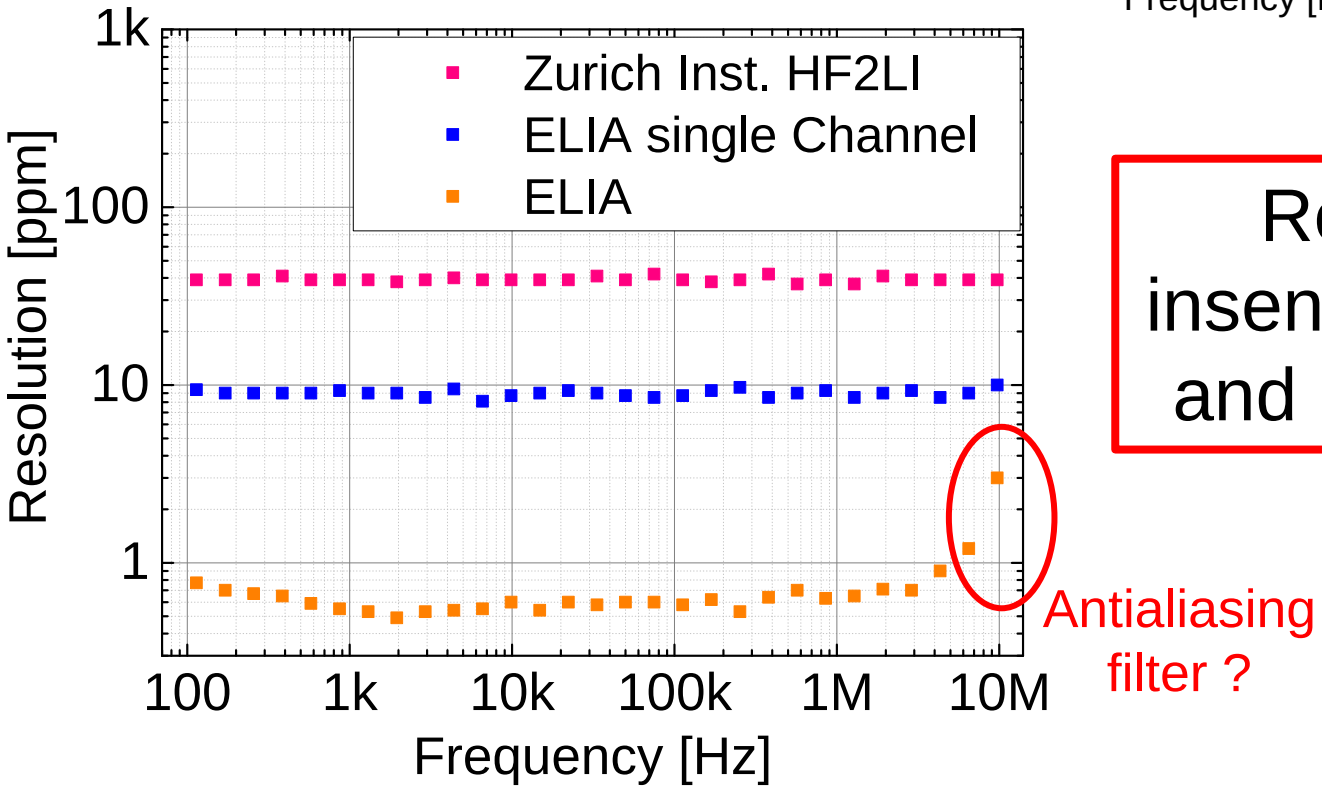

Resolution is insensitive to phase and module of V_{in}!

Summary

- Slow (1/f) random fluctuations of the system gain:
  - Signal source (DAC, optical source,…)
  - Temperature dependence of amplifier/filter gains (C, R,…)
  - Gain fluctuation of ADC
  - A standard LIA does NOT solve the problem of gain fluctuations
- Ratiometric approach
  - Custom instrument using two ADCs
  - Sub-ppm resolution up to 6MHz
  - No external components,
  - No calibration

  } "Plug & measure"

- M. Carminati, et al., "Note: Differential configurations for the mitigation of slow fluctuations limiting the resolution of digital lock-in amplifiers," *Rev. Sci. Instrum.*, vol. 87, no. 2, p. 026102, Feb. 2016.
- G. Gervasoni, et al. "Switched ratiometric lock-in amplifier enabling sub-ppm measurements in a wide frequency range," *Rev. Sci. Instrum.*, vol. 88, no. 10, p. 104704, Oct. 2017.